Intel® Quark™ SoC X1000

UEFI Firmware Writers Guide

February 2016

§ §

Document Number: 330236-006US

undefined undefined undefined undefined

By using this document, in addition to any agreements you have with Intel, you accept the terms set forth below.

You may not use or facilitate the use of this document in connection with any infringement or other legal analysis concerning Intel products described herein. You agree to grant Intel a non-exclusive, royalty-free license to any patent claim thereafter drafted which includes subject matter disclosed herein.

INFORMATION IN THIS DOCUMENT IS PROVIDED IN CONNECTION WITH INTEL PRODUCTS. NO LICENSE, EXPRESS OR IMPLIED, BY ESTOPPEL OR OTHERWISE, TO ANY INTELLECTUAL PROPERTY RIGHTS IS GRANTED BY THIS DOCUMENT.

Intel may make changes to specifications and product descriptions at any time, without notice. Designers must not rely on the absence or characteristics of any features or instructions marked "reserved" or "undefined." Do not finalize a design with this information.

The products described in this document may contain design defects or errors known as errata which may cause the product to deviate from published specifications. Current characterized errata are available on request.

Contact your local Intel sales office or your distributor to obtain the latest specifications and before placing your product order.

Copies of documents which have an order number and are referenced in this document, or other Intel literature, may be obtained by calling 1-800-548-4725, or go to: http://www.intel.com/design/literature.htm.

Intel, Intel Quark, and the Intel logo are trademarks of Intel Corporation in the U.S. and/or other countries.

*Other names and brands may be claimed as the property of others.

© 2016, Intel Corporation

Contents

1.0 About This Document 10
- 1.1 Terminology 10
- 1.2 Reference Documents 11
- 1.3 Related Documents 11
- 1.4 Related Websites 12
- 1.5 Formats and Notations 13

2.0 Introduction 15
- 2.1 Component Identification 16

3.0 Register Access Mechanisms 18
- 3.1 Message Network 18
- 3.2 PCI Express* Configuration Space Base Address 20

4.0 Basic Firmware Requirements 22
- 4.1 Configuring Memory and MMIO Accesses 22
- 4.2 Early Memory Setup 22
- 4.3 Isolated Memory Regions (IMRs) 22
- 4.4 Initializing Chipset Registers 23
- 4.5 Remote Management Unit Binary 29
- 4.6 RMU Binary Relocation 29
- 4.7 PCI/PnP Enumeration 31
- 4.8 ACPI Support 31
- 4.9 Reporting Interrupt Routing to the OS 31
- 4.10 Reporting IO/Memory Resources to the OS 32
- 4.11 Chipset Sticky Registers 32
- 4.12 Boot Checklist 33
- 4.13 Accessing Quark Platform Data System Flash Area 33
- 4.14 UEFI Firmware Sources 37

5.0 DDR3 DRAM Configuration 39
- 5.1 Intel® Quark™ SoC System Memory Controller 39
- 5.2 MRC Flow Selection 39
- 5.3 Programming Considerations 40
- 5.4 Memory Controller Initialization 40
- 5.5 Memory Training Engine 50
- 5.6 Memory Reference Code Configuration 50
- 5.7 UEFI Firmware Sources 52

6.0 CPUID Instruction 53
- 6.1 CPUID Functions 53
- 6.2 UEFI Firmware Sources 55

7.0 Model Specific Registers 56
- 7.1 UEFI Firmware Sources 56

8.0 System Management Mode (SMM) 57
- 8.1 Initializing SMM 57
- 8.2 SMM Revision Identifier 58
- 8.3 SMM State Save Map 58
- 8.4 SMRR Configuration Requirements 59
- 8.5 UEFI Firmware Sources 60

9.0 Cache Control 61
- 9.1 MTRR Programming 61
- 9.2 Processor Implications with Cached SMM Handler 62

9.3 UEFI Firmware Sources....64

10.0 Intel® Legacy SPI Controller....65
10.1 Legacy SPI Flash Decode Enable....65
10.2 Legacy SPI Flash Base Address....65
10.3 Write Protecting SPI Flash Ranges....65
10.4 Opcode/Opcode Type/Prefix Opcode Configuration....65
10.5 Configuration Lockdown....65
10.6 Legacy SPI Flash Update Protection....66
10.7 UEFI Firmware Sources....66

11.0 Reset Control....67
11.1 Reset Control Overview....67
11.2 Cold and Warm Reset Control....67
11.3 UEFI Firmware Sources....68

12.0 PCI IRQ Routing....69
12.1 PCI Interrupt to IRQ Router....69
12.2 Interrupt Routing for Internal Agents....70
12.3 Interrupt Routing for PCI Express* Root Ports....71
12.4 Reporting Interrupt Routing to the OS....72
12.5 UEFI Firmware Sources....74

13.0 PCI Express* Support....75
13.1 PCI Express* Configuration Space Base Address....75
13.2 RCRB (Root Complex Register Block)....79
13.3 Root Complex Topology Programming....79
13.4 PCI Express* Active State Power Management (ASPM)....80
13.5 Root Port Error Reporting....81
13.6 PCI Firmware Spec 3.0 Support....81
13.7 ACPI Table and Methods for PCI Express* Support....82
13.8 PCI Express* PME Firmware Support....87
13.9 UEFI Firmware Sources....90

14.0 Processor Interface....91
14.1 Front Side Bus Interrupt Delivery Mechanism....91
14.2 UEFI Firmware Sources....92

15.0 NMI Handling....93
15.1 Settings to Generate NMI....93
15.2 Steps for Handling NMI....93
15.3 UEFI Firmware Sources....94

16.0 SMI Handling....95
16.1 SMI on Sleep Enable....95
16.2 Setting the EOS Bit....95
16.3 SMI Status Bits....95
16.4 SMI Handler best practice....95
16.5 UEFI Firmware Sources....96

17.0 Power Management....97
17.1 Power Button Override....97
17.2 Power Failure Considerations....97
17.3 Processor Throttling....97
17.4 C States....97
17.5 Wake Events....98
17.6 UEFI Firmware Sources....99

18.0 Suspend Handler Considerations....100

18.1 Power-On Suspend Handling Preparation 100
18.2 S3 Entry Steps 100
18.3 S3 Resume Steps 100
18.4 UEFI Firmware Sources 102

19.0 High Performance Event Timer (HPET) Support 103
19.1 HPET Basic Configuration 103
19.2 UEFI Firmware Sources 103

20.0 GPIO Handling 104
20.1 Legacy GPIOs 104
20.2 Chipset South Cluster GPIO Controller 105
20.3 UEFI Firmware Sources 106

21.0 Security Enhancements 107
21.1 Introduction 107
21.2 Secure Boot 107
21.3 Isolated Memory Regions (IMRs) 110
21.4 Legacy SPI Flash Protection 111
21.5 PCIe Option ROMs 112
21.6 Register Locking 113
21.7 Redundant Images 113
21.8 Limiting Boot Options 114
21.9 Denial of Service/Compromise Prevention 114
21.10 Memory Training Engine Lockdown 115
21.11 SMM Security Enhancements 115
21.12 Rollback Protection on Intel® Quark™ SoC Secure Skus 115
21.13 UEFI Firmware Sources 117

22.0 Firmware Update 119
22.1 Introduction 119
22.2 Create an Update Capsule 121
22.3 Call UEFI Runtime Service UpdateCapsule() 122
22.4 Initiate Capsule Reset 122
22.5 Boot in BOOT_ON_FLASH_UPDATE Mode 122
22.6 Build Capsule Update HOBs 123
22.7 Process Capsule Update HOBs 123
22.8 Write Capsule to Flash 123
22.9 UEFI Firmware Sources 124

23.0 Firmware Recovery 126
23.1 Introduction 126
23.2 Create FVMAIN.fv Recovery Image 128
23.3 Call Fixed Recovery Firmware Volume 128
23.4 Platform Early PEI Stage HOB Setup 129
23.5 Initialize Platform Memory 129
23.6 Load DXE Image 130
23.7 Platform Late PEI Stage HOB Setup 130
23.8 Complete Platform Firmware Recovery 131
23.9 UEFI Firmware Sources 131

24.0 Firmware Error Handling 133
24.1 Introduction 133
24.2 Report and Clear Errors Detected by RMU 133
24.3 Print EDKII ASSERT Messages to Console and halt system boot. 133
24.4 Print EDKII DEBUG_ERROR Messages to Console 133
24.5 UEFI Firmware Sources 134

25.0 Additional Programming Items 135
25.1 Cache Line Size Clarification 135
25.2 VGA 16-bit Decode 135
25.3 I^2C* Host Controller drivers 135
25.4 UEFI Firmware Sources 136

26.0 Trusted Platform Module (TPM) Support 137
26.1 Introduction 137
26.2 TcgComm Library Override 138
26.3 TcgPei Driver Override 138
26.4 TcgDxe Driver Override 138
26.5 ACPI TPM Device Object 138
26.6 TPM Measure Boot 138
26.7 UEFI Firmware Sources 139

Figures

1 PCI Block Diagram 16
2 RMU Binary Relocation 30
3 SMRR Mapping with a Typical Memory Layout 63
4 PIRQ to IRQ Router 70
5 PCI Interrupt Routing Control 71
6 ASPM Calculation Diagram 80
7 Cx State Support Reporting Through _CST Control Method 98
8 Intel® Quark™ SoC Firmware Update Capsule 120
9 FVMAIN.fv Recovery Module File Contents 127

Tables

1 Terminology 10
2 Reference Documents 11
3 Related Documents 11
4 Number Format and Notation 13
5 Data Type Notation 13
6 Register Programming Table Abbreviations 13
7 Register Access Attributes Nomenclature 14
8 Component Identification 16
9 Intel® Quark™ SoC X1000 PCI Devices 17
10 Op codes 10h/11h, Msg Port 03h, Offset 09h: HECREG – Extended Configuration Space 20
11 Non-Standard IO Base Address Registers 23
12 Non-Standard Memory Base Address Registers 24
13 Generic Static Register Configuration 25
14 Chipset Thermal Static Register Configuration Sequence 27
15 Chipset USB Static Register Configuration Sequence 28
16 Chipset PCIe Controller PHY Static Register Configuration Sequence 29
17 DRAM Base Address Ready 30
18 Op codes 06h/07h, Msg Port 31h, Offset 51h: CFGSTICKY_RW – Sticky Read/Write 32
19 Platform data area header 34
20 Platform data item header 34
21 Platform data items common to Intel® platforms and customer platforms 34
22 Platform Data Item: Memory Reference Code (MRC) parameters 35
23 Platform Data Item: 1st Boot UEFI Secure Boot auto provisioning item for UEFI Secure Boot 'kek', 'db' or 'dbx' variable. 37
24 Component-Specific Programming 40
25 Memory Reference Code Bit Swapping 51

26 Intel® Quark™ SoC CPUID Functions 53
27 Model Specific Registers 56
28 SMRAM State Save Map 58
29 Supported Cache Types 61
30 Memory Map and MTRR Programming Example 61
31 RESET CONTROL REGISTER (I/O ADDRESS CF9h) 67
32 PIRQ Routing Table 69
33 PCI Express* Root Port Interrupt Mapping for Downstream Devices 72
34 PCI Express* Slot Interrupt Routing Table Example 72
35 Op Codes 10h/11h, Msg Port 03h, Offset 09h: HECREG – Extended Configuration Space 75
36 PCIe Controller Reset Sequence 76
37 Root Port Slot Power Consumption Guidelines 78
38 D23:F0/F1:RD8h: MPC – Miscellaneous Port Configuration 78
39 D23:F0/F1:RDCh: SMSCS – SMI / SCI Status 78
40 MCFG Table Layout 83
41 Configuration Space Base Address Allocation Structure 83
42 Capabilities DWORD1 Definition 86
43 Interrupt Message Address Format 92
44 Interrupt Message Data Format 92
45 NMI_EN — NMI Enable Register (Shared with RTC Index Register) (I/O) 93
46 GPIO Registers Offset and Function 104
47 South Cluster GPIO Controller MMIO Registers 105
48 Create/Destroy/Lock Requirements for IMRs 110

Revision History

Date	Document Revision	Software Release	Description
January 2016	006	1.2.1	Updated: • Section 4.2, "Early Memory Setup" on page 22 • Table 22, "Platform Data Item: Memory Reference Code (MRC) parameters" on page 35 • Section 5.6, "Memory Reference Code Configuration" on page 50 Added: • Table 25, "Memory Reference Code Bit Swapping" on page 51
August 2015	005	1.2	Updates are included with change bars and include: • Section 21.7, "Redundant Images" on page 113 • Section 25.4, "UEFI Firmware Sources" on page 136 • Section 26.1.2, "EDKII SecurityPkg TPM Supported Features" on page 137 • Section 26.1.3, "EDKII SecurityPkg TPM Unsupported Features" on page 137 • Section 26.3, "TcgPei Driver Override" on page 138, added section • Section 26.4, "TcgDxe Driver Override" on page 138 • Section 26.6, "TPM Measure Boot" on page 138 • Section 26.7, "UEFI Firmware Sources" on page 139, added 2.3 TcgPei Driver Override to table
January 2015	004	1.1	Updates are indicated with change bars and include: • Section 4.13, "Accessing Quark Platform Data System Flash Area" on page 33 • Section 16.4, "SMI Handler best practice" on page 95 • Section 17.0, "Power Management": For POWER/RESET BUTTON event during S3. • Section 20.1.1, "Legacy GPIO Configuration" on page 104 • Section 21.0, "Security Enhancements": For auto usage of security lockdown policies on secure SKU hardware. • Section 21.2, "Secure Boot" on page 107 • Section 21.4, "Legacy SPI Flash Protection" on page 111 • Section 21.11.3, "SMI Handler best practice" on page 115 • Section 21.12, "Rollback Protection on Intel® Quark™ SoC Secure Skus" on page 115 • Section 22.8, "Write Capsule to Flash" on page 123 • Section 23.4, "Platform Early PEI Stage HOB Setup" on page 129 • Removed: Quark specific auto entry into Recovery boot on EDKII ASSERT. Replaced by EDKII standard HALT loop during system boot. • Section 25.0, "Additional Programming Items": I^2C* PI PEI Stage support.

Date	Document Revision	Software Release	Description
June 2014	003	1.0.2	Updates are indicated with change bars and include: • Removed: De-featured SPI DMA IOBAR (SPI DMA configured via Message Network and not via CPU IO Space). • Updated: IMR protection no longer enabled by default. • Updated: Firmware Recovery trusts SPI flash if various checks pass. • Updated: Trusted Platform Module (TPM) Support. • Updated: UEFI Firmware Sources: Basic Firmware Requirements and GPIO Handling. • Updated: Firmware Update to add clarification on capsule creation.
May 2014	002	1.0.1	Updates are indicated with changebars and include: • Updated Table 1, Table 2, and Table 3. • Modified UEFI Firmware Sources references in Section 4.13 and Section 10.7. • Updated Section 13.1 and added UEFI Firmware Sources reference for Section 13.1.1. • Modified UEFI Firmware Sources references in Section 20.3 and Section 21.13. • Added Section 25.3, "I^2C* Host Controller drivers" on page 135. • Added Section 26.0, "Trusted Platform Module (TPM) Support" on page 137. • Updated with trademarked term: Intel® Quark™ SoC (no change bars).
March 2014	001	1.0.0	First public release of document.

§ §

1.0 About This Document

The primary purpose of this document is to supplement the information provided in the Intel® Quark™ SoC X1000 Datasheet for use by UEFI firmware vendors and Intel customers developing their own UEFI firmware. Register descriptions are referenced in this document, however, the Intel® Quark™ SoC X1000 Datasheet should be utilized along with applicable specification updates for obtaining the latest register settings and associated implementation details.

This document describes the implementation of UEFI firmware for the Intel® Quark™ SoC. It makes recommendations to take advantage of certain system capabilities. This document uses the word "should" to describe this category of features. This document also describes functions that the firmware must perform in order to enable correct operation of the platform. This document uses the word "must" to describe this category of features.

This document may be supplemented from time to time with specification updates. The specification updates contain information relating to the latest programming changes. Check with your Intel representative for availability of specification updates.

1.1 Terminology

Table 1. Terminology (Sheet 1 of 2)

Term	Description
ACPI	Advanced Configuration and Power Interface
ASPM	Active State Power Management
BDS	Boot Device Select (UEFI Boot manager Boot Device Select)
DDR	Double Data Rate (Synchronous Dynamic Random Access Memory)
DDR3	Third generation Double Data Rate memory
DDRIO	DDR physical interface (part of the System Memory Controller)
DIMM	Dual In-line memory module
DSDT	Differentiated System Description Table (ACPI DSDT)
eSRAM	Embedded SRAM
FSB	Front Side Bus
FW	Firmware
GUID	Globally Unique IDentifier
HOB	Hand-Off Block
I^2C*	I-squared-C - a type of two wire communications bus
IMR	Isolated Memory Region
IPI	Inter Processor Interrupt

Table 1. Terminology (Sheet 2 of 2)

Term	Description
MRC	Memory Reference Code
MSI	Message Signalled Interrupt
MSS	Memory Sub System
MTE	Memory Training Engine
NV	Non Volatile
PI	Platform Initialization (UEFI Platform Initialization)
RCRB	Root Complex Register Block
RMU	Remote Management Unit
RoT	Root of Trust
SKU	Stock Keeping Unit (identifies different device versions from the same design stepping)
SPD	Serial Presence Detect
SR	Self-Refresh
TCG	Trusted Computing Group
TPM	Trusted Platform Module
TSEG	Top of Memory Segment. Equivalent to SMM Range in Section 6 of *Intel® Quark™ SoC X1000 Datasheet*.
SVN	Security Version Number
UEFI	Unified Extensible Firmware Interface
UDK	UEFI Development Kit

1.2 Reference Documents

Table 2. Reference Documents

Document	Document No.
Intel® Quark™ SoC X1000 Datasheet	329676
Intel® Quark™ SoC X1000 Specification Update	329677
Intel® Quark™ SoC X1000 Secure Boot Programmer's Reference Manual	330234
Intel® Quark™ SoC X1000 Board Support Package (BSP) Build and Software User Guide	329687
Intel® Quark™ SoC X1000 Software Release Notes Contains the software download URL and lists errata.	330232

1.3 Related Documents

Table 3. Related Documents (Sheet 1 of 2)

Document	Location/Number/Revision
UEFI Specification Version 2.3.1	http://www.uefi.org/specs/agreement
Platform Initialization Specification 1.2	http://www.uefi.org/specs/platform_agreement
Intel Corporation, MultiProcessor Specification	Version 1.4, Order #242016

Table 3. Related Documents (Sheet 2 of 2)

Document	Location/Number/Revision
Intel® 64 and IA-32 Architectures Software Developer Manuals are available at: https://www-ssl.intel.com/content/www/us/en/processors/architectures-software-developer-manuals.html • Intel® 64 and IA-32 Architectures Software Developer's Manual Volume 1: Basic Architecture Order #253665 • Intel® 64 and IA-32 Architectures Software Developer's Manual Volume 2A: Instruction Set Reference, A-M Order #253666 • Intel® 64 and IA-32 Architectures Software Developer's Manual Volume 2B: Instruction Set Reference, N-Z Order #253667 • Intel® 64 and IA-32 Architectures Software Developer's Manual Volume 3A: System Programming Guide Part 1 Order #253668 • Intel® 64 and IA-32 Architectures Software Developer's Manual Volume 3B: System Programming Guide Part 2 Order #253669	
Intel® 82093AA I/O Advanced Programmable Interrupt Controller (I/O APIC) Datasheet	Order #290566
Compaq Computer Corporation, Phoenix Technologies, Ltd., Intel Corporation, Plug and Play BIOS Specification	Revision 1.0a, June 7, 2005
Hewlett-Packard Corporation, Intel Corporation, Microsoft Corporation, Phoenix Technologies Ltd., Toshiba Corporation, Advanced Configuration and Power Interface (ACPI)	Version 3.0a
PCI Express* Special Interest Group, PCI Express* Base Specification	Revision 1.1
PCI Express* Special Interest Group, PCI Express* Card Electromechanical Specification	Revision 1.1
PCI Special Interest Group, PCI BIOS Specification	Revision 2.1, August 26, 1994
PCI Special Interest Group, PCI Local Bus Specification	Revision 2.3, March 29, 2002
PCI Special Interest Group, PCI to PCI Bridge Architecture Specifications	Revision 1.2, June, 2003
ACPI Specification, version 5.0	Revision 5.0 December 6, 2011
DDR3 SDRAM Specification [JESD79-3F]	http://www.jedec.org/standards-documents/docs/jesd-79-3d Revised July 2012
TPM Main Specification	Version 1.2, Rev. 116, 2011-03-01, TCG (parts 1-3)
PC Client Work Group Specific Implementation Specification for Conventional BIOS, Version 1.2 [TCG SPEC BIOS]	http://trustedcomputinggroup.org Version 1.20 FINAL Revision 1.00 July 13, 2005 For TPM Family 1.2; Level 2

1.4 Related Websites

Context	Site
PCI IRQ Routing for MP ACPI systems	http://msdn.microsoft.com/en-us/library/windows/hardware/gg454523.aspx
Intel® 64 and IA-32 Architectures Software Developer's Manuals	http://www.intel.com/products/processor/manuals/
Power Management and ACPI	http://msdn.microsoft.com/en-us/windows/hardware/gg463220
MultiProcessor Specification	http://www.intel.com/design/archives/processors/pro/docs/242016.htm
Power management, ACPI and related specifications	http://www.acpi.info/DOWNLOADS/ACPIspec50.pdf
Trusted Platform Module (TPM)	http://trustedcomputinggroup.org

1.5 Formats and Notations

The target audience for this document is UEFI firmware writers. The formats and notations used within this document model those used by UEFI firmware vendors. This section describes the formatting and the notations that are followed in this document.

Table 4. Number Format and Notation

Number Format	Notation	Example
Decimal (default)	d	14d
Binary	b	1110b
Hex	h	0Eh

Table 5. Data Type Notation

Data Type	Notation	Size
BIT	b	Smallest unit, 0 or 1
BYTE	B	8 bits
WORD	W	16 bits or 2 bytes
DWORD	DW	32 bits or 4 bytes
QWORD	QW	8 bytes or 4 words
Kilobyte	KB	1024 bytes
Megabyte	MB	1,048,576 bytes
Gigabyte	GB	1024 MB

Table 6. Register Programming Table Abbreviations

Abbreviation	Meaning
B	PCI Bus
D	PCI Device
F	PCI Function
P	Msg Port
R	Register

This document refers to individual bit fields within a register, as well as the registers themselves with their designated acronym, followed by the device, register address and bit field in parenthesis. The reader is expected to be familiar with the register definitions for the Quark SoC. The reader must also be capable of referencing the associated documentation described in Table 2 if more register field details are required.

When the document specifies individual register bits to be modified, system firmware must perform a read, modify, write sequence to ensure other bits are not changed.

Table 7. Register Access Attributes Nomenclature

Abbreviation	Meaning	Description
RO	Read Only	If a register is read only, writes to this register have no effect.
WO	Write Only	If a register is write only, reads return undefined data.
R/W	Read/Write	A register bit with this attribute can be read and written.
R/WO	Read/Write Once	A register bit with this attribute can be read and written only once. Additional writes to R/WO bits will not alter their state.
RWC	Read/Write Clear	A register bit with this attribute can be read or cleared by software. In order to clear this bit, any value must be written to it.

§ §

2.0 Introduction

Intel® Quark™ SoC is the next generation secure, low-power Intel Architecture (IA) System on a Chip (SoC) for deeply embedded applications. The Intel® Quark™ SoC X1000 integrates the Intel® Quark™ Core plus all the required hardware components to run off-the-shelf operating systems and to leverage the vast x86 software ecosystem.

This section provides an introduction to the Intel® Quark™ SoC. For complete details, refer to the Intel® Quark™ SoC X1000 Datasheet.

The Intel® Quark™ SoC is partitioned into three major clusters - BaseIA, the Memory Sub-System (MSS), and South cluster as shown in Figure 1.

The main components for BaseIA are:

- 400MHz Intel® Quark™ Core (single core) with local APIC
- Host Bridge with Message Bus interface
- Legacy Bridge
- IOSF fabric interface to attach the South cluster

The MSS is comprised of:

- 512KB embedded SRAM
- 16bit DDR3 ECC memory controller supporting 800 MT/s data rates.

The South cluster terminates the two IOSF ports from BaseIA. The first IOSF port is terminated in an 2x1 lane PCI Express Gen 1 controller. The second IOSF port is terminated in an IOSF-AHB bridge. The AHB fabric supports the following peripherals:

- 2xSPI
- 2x16550 UART
- 1xSDIO Controller
- 2x10/100 Ethernet MAC
- 1xGPIO/I^2C Controller
- 1xUSB EHCI Host
- 1xUSB OHCI Host
- 1xUSB Device

The Intel® Quark™ SoC is designed to minimize the number of external components required to enable the SoC at a platform level. The SoC requires an industry standard voltage regulator providing three output rails (3.3v, 1.5v and 1.0v), a 25 MHz crystal, legacy SPI flash device, DDR3 memory, and an external Ethernet PHY IC to enable a complete system on a 4 layer FR4 platform.

The Intel® Quark™ SoC supports fully functional (S0), Standby (S3), hibernate (S4), shutdown (S5) states.

Intel® Quark™ SoC package is a 393 ball, 15x15mm FCBGA based on a 0.593mm pitch.

Figure 1. PCI Block Diagram

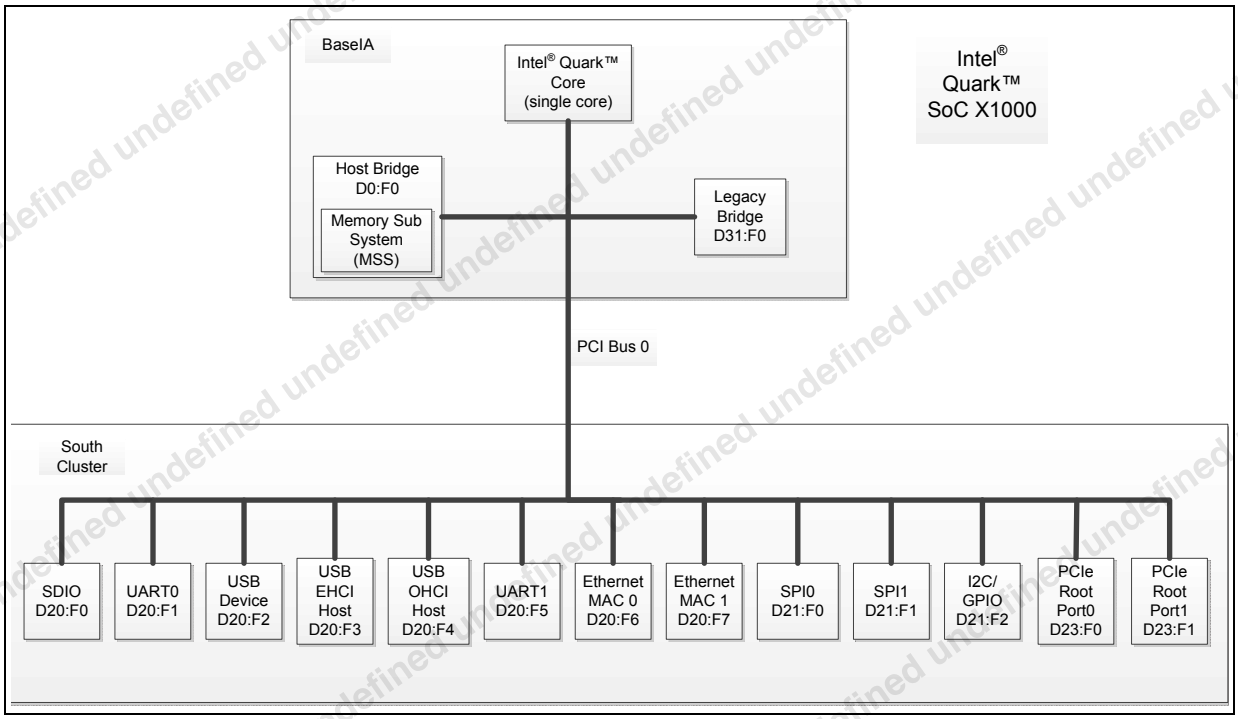

2.1 Component Identification

The Quark SoC stepping is identified by both:

- Processor Family/Model/Stepping returned by the CPUID instruction. This will always return 0x590 for the Intel® Quark™ SoC X1000.
- Revision ID register of the Host Bridge, located at D0:F0. Reads of the register will reflect the stepping.

Table 8. Component Identification

Vendor ID[1]	Device ID[2]	Revision ID[3]	Stepping
8086h	0958h	00h	A0h

Notes:

1. The Vendor ID corresponds to bits 15-0 of the Vendor ID Register located at offset 00-01h in the PCI configuration space of the device.
2. The Device ID corresponds to bits 15-0 of the Device ID Register located at offset 02-03h in the PCI configuration space of the device.
3. The Revision ID corresponds to bits 7-0 of the Revision ID Register located at offset 08h in the PCI configuration space of the device.

The Quark SoC incorporates a variety of PCI functions as listed in Table 9. All devices reside on PCI bus #0 as shown in Figure 1.

Table 9. Intel® Quark™ SoC X1000 PCI Devices

Device:Function	Description	Device ID	A0 SRID
D0:F0	Host Bridge	0958h	00h
D31:F0	Legacy Bridge	095Eh	00h
D23:F0	PCIe* Root Port 0	11C3h	00h
D23:F1	PCIe* Root Port 1	11C4h	00h
D20:F0	SDIO / eMMC Controller	08A7h	10h
D20:F1	HS-UART 0	0936h	10h
D20:F2	USB 2.0 Device	0939h	10h
D20:F3	USB EHCI Host Controller	0939h	10h
D20:F4	USB OHCI Host Controller	093Ah	10h
D20:F5	HS-UART 1	0936h	10h
D20:F6	10/100 Ethernet MAC 0	0937h	10h
D20:F7	10/100 Ethernet MAC 1	0937h	10h
D21:F0	SPI Controller 0	0935h	10h
D21:F1	SPI Controller 1	0935h	10h
D21:F2	I^2C* Controller and GPIO Controller	0934h	10h

§ §

3.0 Register Access Mechanisms

This section summarizes the register access mechanisms required for a Quark-based platform. For complete details, refer to the Intel® Quark™ SoC X1000 Datasheet.

3.1 Message Network

3.1.1 Message Network Registers

In the Quark SoC, some chipset commands are accomplished by utilizing the internal message network within the host bridge (D0:F0). Accesses to this network are accomplished by populating the message control register (MCR), Message Control Register eXtension (MCRX) and the message data register (MDR).

Register writes via message network are sent by first loading the MDR with the desired data and loading (MCRX) with the high order bits of the target register address. The command is sent by populating the MCR with the target port, low byte of target register address, and the write opcode.

Register reads via message network are sent by first populating the MCRX and MCR with the target port, target register address, and the read opcode. Data is then accessed via the MDR.

As well as accessing Quark SoC registers the message network can be used to send atomic commands to the internal SoC units.

D0:F0:RD8h MCRX – Message Control Register eXtension

This register provides extra parameter bits to the Message Control Register (as follows).

Bit	Type	Reset	Description
31:8	WO	0h	Offset/Register Extension (SB_ADDR_EXTN): This is used for messages sent to end points that require more than 8 bits for the offset/register. These bits are a direct extension of MCR[15:8].
7:0	WO	0h	Reserved

D0:F0:RD0h MCR – Message Control Register

A write to this register will cause a message to be sent via the internal message network with the parameters defined in fields below unless the register is locked (as follows). This register must be written with all bytes enabled.

Bit	Type	Reset	Description
31:24	WO	0h	Message Opcode: (Refer to the *Intel® Quark™ SoC X1000 Datasheet* for all supported opcodes)
23:16	WO	0h	Message Port: The device or unit to be targeted by the message bus transaction
15:8	WO	0h	Message Target Register Address: Bits 7:0 of the private register offset to be targeted by the message bus transaction. This field applies only to register read and write operations.
7:4	WO	0h	Message Write Byte Enables#: Active high byte enables which enable each of the corresponding bytes in the MDR when high.
3:0	WO	0h	Reserved

D0:F0:RD4h MDR – Message Data Register

Software must prepare data in this register prior to initiating a write transaction via the Message Control Register (D0:F0:RD0h). After initiating a read transaction via the MCR, software reads the returned data from this register.

Bit	Type	Reset	Description
31:0	RW	0h	Message Data

3.1.2 Message Network Register Programming

Some Quark SoC configuration registers exist outside of PCI, I/O, and MMIO space. Accesses to these registers are accomplished via the message network port access mechanism. Common opcode pairs are opcodes 10h/11h and 6h/7h. Setting the message opcode to 6h/10h initiates a read from an internal register, while opcode 7h/11h initiates a write to an internal register. For all other supported opcodes, refer to the Intel® Quark™ SoC X1000 Datasheet.

Examples

1. Read the USB PHY Global port register (opcode 06h, port 14h, register 4001h)
   a. Set MCRX (D0:F0:RD8h) to 00004000h, where 000040h = internal register offset[31:8]
   b. Set the PCI configuration register MCR (D0:F0:RD0h) to 061401F0h, where 6 = the read opcode, 14 = the message port, 01 = the internal register offset, and F0 sets all byte enables (must always set the lower byte to F0h). Writing to this register initiates reading of the internal register and places the read data in the "Message Data Register".
   c. Read the PCI configuration register MDR (D0:F0:RD4h) and extract the value of bits 31:0.
2. Read the current setting of the Power Management I/O Base Address (opcode 10h, port 04h, register 70h, bits 15:0).
   a. Set MCRX (D0:F0:RD8h) to 00000000h, where 000000h = internal register offset[31:8].

b. Set the PCI configuration register MCR (D0:F0:RD0h) to 100470F0h, where 10 = the read opcode, 04 = the message port, 70 = the internal register offset[7:0], and F0 sets all byte enables (must always set the lower byte to F0h). Writing to this register initiates reading of the internal register and places the read data in the "Message Data Register".

c. Read the PCI configuration register MDR (D0:F0:RD4h) and extract the value of bits 15:0.

3. Write the "Power Management I/O Base Address" register (opcode 11h, port 04h, register 70h) to 80001010h (program the base address to 1010h and set the enable bit at bit 31).

a. Set the PCI configuration register MDR (D0:F0:D4h) to 80001010h to prepare the data for the write transaction.

b. Set MCRX (D0:F0:RD8h) to 00000000h, where 000000h = internal register offset[31:8].

c. Set the PCI configuration register MCR (D0:F0:D0h) to 110470F0h, where 11 = the write opcode, 04 = the message port, 70 = the internal register offset[7:8], and F0 sets all byte enables (must always set the lower byte to F0h). Writing to this register initiates writing of the internal register, using the data previously programmed to MDR.

3.2 PCI Express* Configuration Space Base Address

The PCI Express* specification defines a 256 MB block within the memory address space as PCI Express* configuration space addressable through a Bus:Device:Function mapping. The base address of this configuration space is determined by the value programmed in the "Extended Configuration Space" register.

Table 10. Op codes 10h/11h, Msg Port 03h, Offset 09h: HECREG – Extended Configuration Space

Bit Range	Default & Access	Description
31:28	000b RW	**Extended Configuration Base Address (EC_BASE):** This field describes the upper 4-bits of the 32-bit address range used to access the memory-mapped configuration space. This field must not be set to 0xF.
27:1	000000h RO	**Reserved (RSV11):** Reserved.
0	0b RW	**Extended Configuration Space Enable (EC_ENABLE):** When set, causes the EC_Base range to be compared to incoming memory accesses. If bits [31:28] of the memory access match the EC_Base value then a posted memory access is treated as a non-posted configuration access.

Once initialized and enabled by firmware, software can use memory instructions to access the PCI Express* configuration space registers by byte, word or dword, though the access may not cross dword boundaries.

To maintain the compatibility with PCI configuration space, the first 256 bytes (offset 00h through FFh) of the configuration space for a Bus:Device:Function can also be accessed via the I/O index/data register pair at CF8h/CFCh as defined in PCI 2.x specification.

In addition to programming and enabling the PCI Express* EC base address in the EC register (see Table 35), system firmware should program the identical value into Msg Port 00h, Offset 00h.

3.2.1 Bus:Device:Function:Register Offset Translation

The memory-mapped physical address of a given PCI Express* configuration register of a specific bus:device:function can be determined by:

PCI Express* Config Space Base Address + (Bus Number x 100000h) + (Device Number x 8000h) + (Function Number x 1000h) + Register Offset

§ §

4.0 Basic Firmware Requirements

This section discusses the basic firmware requirements for a Quark-based platform.

4.1 Configuring Memory and MMIO Accesses

Quark SoC is capable of addressing both the MSS (eSRAM/DDR3) and MMIO in the 32-bit address space. To control which accesses go to the MSS and MMIO, the Quark SoC has implemented a HMBOUND register (Msg Port 3: R08h). UEFI firmware must set HMBOUND to the top of physical memory in the system (eSRAM/DDR3). All memory accesses below HMBOUND go to the MSS while all other memory accesses go to MMIO. Once MRC has initialized DDR3 memory, UEFI firmware must lock HMBOUND at the top of physical memory in the system (the top of physical memory depends on the location of eSRAM and may not actually be the top of DDR3 memory). Refer to the Intel® Quark™ SoC X1000 Datasheet for additional information on the HMBOUND register.

4.2 Early Memory Setup

UEFI firmware needs access to memory before DDR3 memory is initialized. In particular, the MRC code that initializes DDR3 memory, itself requires memory to be able to execute. Quark SoC contains an embedded 512KB SRAM (eSRAM) that is initialized by hardware and available to UEFI firmware following release of the core from reset. UEFI firmware is responsible for relocating this eSRAM to a suitable location in the physical memory map and enabling it. Refer to Table 12 for the recommended location to locate the eSRAM. This eSRAM is then available to UEFI firmware as early code/data memory.

To optimize boot time, UEFI firmware enables caching for system flash and eSRAM access as soon as possible after the system has come out of reset and has mapped eSRAM into the CPU memory map. See section 9.1 for MTRR details.

4.3 Isolated Memory Regions (IMRs)

Quark SoC has implemented IMRs to help protect memory during system operation. Software can configure IMRs to allow/deny access by certain system agents to programmed memory ranges. Refer to the Intel® Quark™ SoC X1000 Datasheet for the IMR description and list of system agents than can be impacted by IMR setup. Depending on platform policies UEFI firmware restricts memory access to various regions to only the system agents that must have access. Furthermore, depending on policy the UEFI firmware may lock any memory regions that must persist through OS boot and beyond. IMRs are a useful feature that software beyond UEFI firmware should also use for better system security.

4.4 Initializing Chipset Registers

4.4.1 MMIO Write Considerations

Writes to Quark SoC MMIO registers may not immediately affect the behavior of the chipset. The data may be placed in an intermediate buffer before actually taking effect. To ensure the data is flushed into the chipset, firmware must perform a read from a register after writing data to that register. The affected bit-fields must then be compared to the expected values to ensure coherency. If firmware does not perform this read, the register write may not have completed and chipset behavior based on the programmed MMIO register is not guaranteed.

4.4.2 Non-Standard BARs

Table 11 and Table 12 specify the base address registers in the Quark SoC (excluding PCI standard BARs), along with suggested values.

Note: It is the responsibility of the firmware programmer to ensure the ranges below do not overlap or conflict with any other resources on the platform.

Table 11. Non-Standard IO Base Address Registers

Region	Base Address Type	BAR Control	Size	Suggested Value
ACPI PM1 block	I/O	D31:F0:R48h	16B	80001000h (Address=1000h)
ACPI P block	I/O	Msg Port 4:R70h	16B (Must be located at PM1 block base + 10h)	80001010h (Address=1010h)
GPIO	I/O	D31:F0:R44h	128B	80001080h (Address=1080h)
GPE0	I/O	D31:F0:R4Ch	64B	80001100h (Address=1100h)
WDT	I/O	D31:F0:R84h	64B	80001140h (Address=1140h)

Table 12. Non-Standard Memory Base Address Registers

Region	Base Address Type	BAR Control	Size	Suggested Value
SMM Control	Memory	Msg Port 3:R04h	2 MB	See Note 1 below.
PCI Express*	Memory	Msg Port 0:R00h	256 MB	E0000001h (Address=E0000000h) See Note 3 below.
PCI Express*	Memory	Msg Port 3:R09h	256 MB	E0000001h (Address=E0000000h) See Note 3 below.
RCBA	Memory	D31:F0:RF0h	16 KB	FED1C001h (Address=FED1C000h)
eSRAM	Memory	Msg Port 5:R82h	512 KB	See Note 2 below. 10000080h (Address=80000000h)

Notes:

1. The layout of the SMM control register is given below. The "Upper Bound" field of the HSMMCTL register must be programmed to match the upper 12 bits of "Top of Physical Memory – 2MB". For example, if 1 GB of memory is present in the system then "Top of Physical Memory – 2MB" = (40000000h – 200000h = 3FE00000h).
2. eSRAM is used as early available memory before DDR3 memory is initialized. Refer to the Intel® Quark™ SoC X1000 Secure Boot Programmer's Reference Manual documentation for eSRAM usage during a secure boot. eSRAM is then available for use as general purpose memory as required by the system programmer.
3. The PCI Express* Configuration Space Base Address is programmed to two Quark SoC registers. The Intel® Quark™ SoC addresses all 256MB starting at PCI Express* EC base address but the amount of memory mapped space reserved is defined by the PCD gEfiQuarkNcSocIdTokenSpaceGuid.PcdPciExpressSize.

Msg Port 03h, Register 04h: HSMMCTL–Host System Management Mode Controls

Bit	Type	Reset	Description
31:20	RW/L	12'h000	SMM Upper Bound (SMM_END): These bits are compared with bits [31:20] of the incoming address to determine the upper 1MB aligned value of the protected SMM range.
19	RO	1'b0	Reserved (RSV42)
18	RW/L	1'b1	Non-Host SMM Writes Open (NON_HOST_SMM_WR_OPEN)
17	RW/L	1'b1	Non-Host SMM Reads Open (NON_HOST_SMM_RD_OPEN)
16	RO	1'b0	Reserved (RSV07)
15:4	RW/L	12'h000	SMM Lower Bound (SMM_START): These bits are compared with bits [31:20] of the incoming address to determine the lower 1MB aligned value of the protected SMM range
3	RO	1'b0	Reserved (RSV06)

Bit	Type	Reset	Description
2	RW/L	1'b1	SMM Writes Open (SMM_WR_OPEN): Allow non-SMM writes to SMM space. This bit allows processor writes to the SMM space defined by the SMM Start and SMM End fields even when the processor is not in SMM mode.
1	RW/L	1'b1	SMM Reads Open (SMM_RD_OPEN): Allow non-SMM reads to SMM space. This bit allows processor reads from the SMM space defined by the SMM Start and SMM End fields even when the processor is not in SMM mode.
0	RW/O	1'b0	SMM Locked (SMM_LOCK): When set, this bit locks this register and prevents write access. A reset is required to unlock.

The "Upper Bound" HSMMCTL field is programmed with bits [31:20] of the SMM Range upper bound memory address and "Lower Bound" HSMMCTL field is programmed with bits [31:20] of the SMM Range lower bound memory address (bits [19:0] of SMM address assumed to be 0 since SMM Range is 1MB aligned).

Bits 2:1 of HSMMCTL should be programmed to allow reads and writes to SMM space for SMM initialization. After SMM initialization, the SMM Locked bit must be set to prevent further changes to this register.

For the configuration in the above example with 1GB physical memory, the value of the HSMMCTL register would be 3FF03FF1h:

- SMM Base Address = 0x3FF00000
- SMM Limit Address = 0x3FFFFFFF
- SMM Locked

4.4.3 Static Register Programming

This sub-section defines data that must be programmed in all cases. This section DOES NOT include a list of registers/bit-fields whose values may change based on platform configuration.

Table 13 summarizes the chipset registers that must always be programmed to a fixed value during the boot process. This table excludes standard PCI registers, legacy I/O registers, and registers whose values vary depending on the system configuration. The bus number is 0 for all PCI devices.

Table 13. Generic Static Register Configuration (Sheet 1 of 2)

Name	Access Type	Address[Bits]	Value	When to Program
E000h/F000h Routing	Message Port	Opcode Pair 10h/11h Msg Port 3h:R03h[2:1]	11b	Stage 1: Immediately after shadowing (route reads to DRAM)
PCIe* Slot Capabilities	PCI	D23:F0:R54h[31:0]	Platform Specific	Stage 2: Before PCI enumeration
PCIe* Slot Capabilities	PCI	D23:F1:R54h[31:0]	Platform Specific	Stage 2: Before PCI enumeration
PCIe* Packet Fast Transmit Mode (IPF):	PCI	D23:F0/F1:RD4h[11]	1b	Stage 1: after Memory Init
PCIe* Message Bus Idle Counter (SBIC):	PCI	D23:F0/F1:RF4h[17:16]	11b	Stage 1: after Memory Init
PCIe* Upstream Non-Posted Split Disable (UNSD):	PCI	D23:F0/F1:RD0h[24]	0b	Stage 1: as part of PCIe slot configuration

Table 13. Generic Static Register Configuration (Sheet 2 of 2)

Name	Access Type	Address[Bits]	Value	When to Program
PCIe* Upstream Non-Posted Request Size (UNRS):	PCI	D23:F0/F1:RD0h[15]	1b	Stage 1: as part of PCIe slot configuration
PCIe* Upstream Posted Request Size (UPRS):	PCI	D23:F0/F1:RD0h[14]	1b	Stage 1: as part of PCIe slot configuration
Element Self Descriptor	MMIO	RCBA + 04h[23:16]	00h	Stage 3: Before passing control to OS
MAC Address Ethernet MAC 0 / MAC1 ADDRLO	MMIO	MAC0 [BAR0] + 44h[31:0] BAR0 Reference: [B:0, D:20, F:6/F:7] + 10h	Platform Specific	Stage 1: Before Memory Init.
MAC Address Ethernet MAC 0 / MAC1 ADDRHI	MMIO	MAC0 [BAR0] + 40h[15:0] BAR0 Reference: [B:0, D:20, F:6/F:7] + 10h	Platform Specific	Stage 1: Before Memory Init.
MAC Address Ethernet MAC 0 / MAC1 Address Enable (AE)	MMIO	MAC0 [BAR0] + 40h[31] BAR0 Reference: [B:0, D:20, F:6/F:7] + 10h	Platform Specific	Stage 1: Before Memory Init.
ASTATUS	Message Port	Opcode Pair 10h/11h Msg Port 0h:R21h[1:0]	10b	Stage 1: Before Memory Init
		Opcode Pair 10h/11h Msg Port 0h:R21h[3:2]	10b	
		Opcode Pair 10h/11h Msg Port 0h:R21h[9:8]	11b	
		Opcode Pair 10h/11h Msg Port 0h:R21h[11:10]	11b	
MemoryManager: non host request queue limit.	Message Port	Opcode Pair 10h/11h Msg Port 05h:R20h[5:0]	000010b	Stage 1: Before Memory Init
Chipset Internal Clocks Config	Message Port	Opcode Pair 6h/7h Msg Port 32h:R0140h[22:20]	001b	Stage 1: Before Memory Init See Note1 below.
		Opcode Pair 6h/7h Msg Port 32h:R0140h[25:23]	011b	
		Opcode Pair 6h/7h Msg Port 32h:R2000h[0]	0b	
		Opcode Pair 6h/7h Msg Port 32h:R0314h[0]	1b	
		Opcode Pair 6h/7h Msg Port 32h:R0414h[0]	1b	
		Opcode Pair 6h/7h Msg Port 32h:R0514h[0]	1b	

Notes:
1. All READ accesses to registers at port 32h must be followed by 2 identical WRITEs even if the contents are not to be changed.

Table 14. Chipset Thermal Static Register Configuration Sequence

Name	Access Type	Address[Bits]	Value	When to Program
Thermal Sensor Mode Config	Message Port	Opcode Pair 06h/07h Msg Port 31h:R31h[5:3]	100b	Stage 1: Before Memory Init
		Opcode Pair 06h/07h Msg Port 31h:R31h[12:8]	00010b	
		Opcode Pair 06h/07h Msg Port 31h:R31h[14]	1b	
		Opcode Pair 06h/07h Msg Port 31h:R31h[17]	0b	
		Opcode Pair 06h/07h Msg Port 31h:R31h[18]	0b	
		Opcode Pair 06h/07h Msg Port 31h:R32h[15:0]	011fh	
		Opcode Pair 06h/07h Msg Port 31h:R33h[7:0]	17h	
		Opcode Pair 06h/07h Msg Port 31h:R33h[9:8]	01b	
		Opcode Pair 06h/07h Msg Port 31h:R33h[31:24]	00h	
		Opcode Pair 06h/07h Msg Port 31h:R34h[22:11]	0c8h	
Thermal Monitor Catastrophic Trip Set Point		Set Point Opcode Pair 10h/11h Msg Port 04h:RB2h[7:0]	Platform Specific See Note1 below	
Thermal Monitor Catastrophic Trip Clear Point		Clear Point Opcode Pair 10h/11h Msg Port 04h:RB2h[23:16]	Platform Specific See Note1 below	
Take Thermal Sensor out of Reset		Opcode Pair 06h/07h Msg Port 31h:R34h[0]	0b	
Enable Thermal Monitor		Opcode Pair 10h/11h Msg Port 04h:RB0h[15]	1b	
Lock All Thermal Configuration		Opcode Pair 10h/11h Msg Port 04h:R71h[6:5]	11b	

Notes:

1. Both fields must be programmed, clear point must be lower then set point and the values in degrees Celsius is calculated by subtracting an offset of 50 from the 8-bit field value. The temperature in degrees Celsius corresponds to: 00h: -50C, 01h: -49C, ...,FEh: 204C, FFh: 205C

Table 15. Chipset USB Static Register Configuration Sequence

Name	Access Type	Address[Bits]	Value	When to Program
USB2 Global PORT	Message Port	Opcode Pair 06h/07h Msg Port 14h:R4001h[1]	0b	Stage 1: Before Memory Init
		Opcode Pair 06h/07h Msg Port 14h:R4001h[8:7]	11b	
USB2 COMPBG		Opcode Pair 06h/07h Msg Port 14h:R7F04h[10:7]	1001b	
USB2 PLL2		Opcode Pair 06h/07h Msg Port 14h:R7F03h[29]	1b	
USB2 PLL1		Opcode Pair 06h/07h Msg Port 14h:R7F02h[1]	1b	
USB2 PLL1		Opcode Pair 06h/07h Msg Port 14h:R7F02h[6:3]	1000b	
USB2 PLL2		Opcode Pair 06h/07h Msg Port 14h:R7F03h[29]	0b	
USB2 PLL2		Opcode Pair 06h/07h Msg Port 14h:R7F03h[24]	1b	
USB EHCI Packet Buffer OUT Threshold (OUT_Threshold)	MMIO	USB EHCI [BAR0] + 94h[23:16] BAR0 Reference: [B:0, D:20, F:3] + 10h	7fh	Stage 1: After Memory Init.
USB EHCI Packet Buffer IN Threshold (IN_Threshold)	MMIO	USB EHCI [BAR0] + 94h[7:0] BAR0 Reference: [B:0, D:20, F:3] + 10h	7fh	Stage 1: After Memory Init.
USB Device Interrupt Mask Register (d_intr_msk_udc_reg)	MMIO	USB Device [BAR0] + 0410h[31:0] BAR0 Reference: [B:0, D:20, F:2] + 10h	0000007fh	Stage 1: After Memory Init.
USB Endpoints Interrupt Mask Register (ep_intr_msk_udc_reg)	MMIO	USB Device [BAR0] + 0418h[31:0] BAR0 Reference: [B:0, D:20, F:2] + 10h	000f000fh	Stage 1: After Memory Init.
USB Endpoints Interrupt Register (ep_intr_udc_reg)	MMIO	USB Device [BAR0] + 0414h[31:0] BAR0 Reference: [B:0, D:20, F:2] + 10h	000f000fh	Stage 1: After Memory Init.

Table 16. Chipset PCIe Controller PHY Static Register Configuration Sequence

Name	Access Type	Address[Bits]	Value	When to Program
Mixer Load Lane 0	Message Port	Opcode Pair 02h/03h Msg Port 16h:R2080h[7:6]	00b	Stage 1: After releasing PCIe controller from reset
Mixer Load Lane 1		Opcode Pair 02h/03h Msg Port 16h:R2180h[7:6]	00b	

4.5 Remote Management Unit Binary

The Quark SoC includes a Remote Management Unit that must access its binary data. This binary data is referred to as the RMU binary. The following sections describe the UEFI firmware requirements for handling this RMU binary.

4.5.1 Secure SKU

The RMU binary data is split into two parts (a 2KB RoT binary and a main binary). The location of the RoT binary is hardcoded to FFFE0000h which is located in the Legacy Bridge internal ROM. This 2KB RoT binary is automatically loaded by the Remote Management Unit at power on. During boot, UEFI firmware shadows the main RMU binary data to memory and informs the Remote Management Unit of its location.

4.5.2 Base SKU (Non-Secure)

The location of the RMU binary data is determined by a strap as follows (refer to the Intel® Quark™ SoC X1000 Datasheet for more details):

- 0b: FFF00000h
- 1b: FFD00000h

The first 2KB of the RMU binary is automatically loaded by the RMU at power on. During boot, UEFI firmware shadows the main RMU binary data to memory and informs the Remote Management Unit of its location.

4.6 RMU Binary Relocation

After main memory has been either initialized or restored after leaving a suspend state, the RMU binary should be relocated into main system memory to increase system performance.

The firmware build files place a copy of the RMU binary in each of the built stage1 firmware volumes. The firmware finds the binary in the firmware volume using the GUID filename defined by PCD(gEfiQuarkNcSocIdTokenSpaceGuid.PcdQuarkMicrocodeFile) and then copies this binary to main memory. Finally the firmware informs the chipset Remote Management Unit of its location.

Figure 2. RMU Binary Relocation

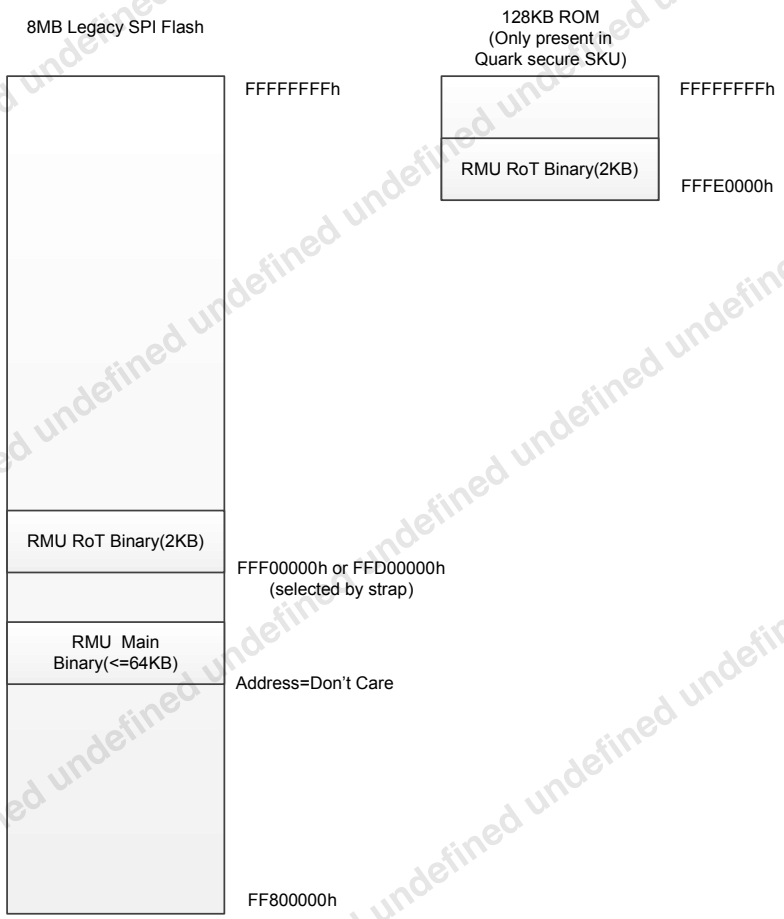

- Quark Secure SKU: RMU RoT binary is automatically loaded by hardware from address FFFE0000h in the legacy ROM.
- Quark Base SKU (non-secure): RMU RoT binary is automatically loaded by hardware from address FFF00000/FFD00000h in the legacy SPI Flash.
- RMU Main Binary is copied to system memory by UEFI firmware during boot for both secure and base Quark SKUs.

The RMU binary relocation procedure is as follows:

1. Copy the RMU binary (up to 64KB) from Firmware Volume file defined by PCD(gEfiQuarkNcSocIdTokenSpaceGuid.PcdQuarkMicrocodeFile) to main memory.

   Note: The RMU binary must be aligned on a 64KB boundary in main memory.

2. Indicate to the chipset that the RMU binary has been copied via the DRAM Base Address Ready register [Opcode 78h:Port 04h, Register 00h]. The data payload should contain the upper 16 bits of the 32 bit DRAM address where the RMU's 64KB block is located as shown in Table 17.

Table 17. DRAM Base Address Ready

Bit	Description
31:16	Bit 31:16 of the RMU's 64KB code block in DRAM
15:00	0000h

After this procedure is executed, the image located in main memory will be used by the system.

Note: For best system performance, the RMU should be relocated as early as possible after main memory is available.

4.6.1 RMU Binary Relocation Considerations

Firmware must ensure that any OS software does not disturb the integrity of the RMU binary after it has been relocated. The 64KB region that was reserved for the RMU binary must be reported as Reserved in the UEFI memory map.

4.7 PCI/PnP Enumeration

System firmware is required to perform standard PCI/PnP enumeration and initialize all PCI devices/functions discovered. As part of this process, all PCI-to-PCI bridges (D23:F0-F1) must be initialized with secondary/subordinate bus numbers assigned and bridge windows programmed properly. In addition, I/O, memory, and interrupt resource allocation to PCI devices should be completed.

4.8 ACPI Support

System firmware should include ACPI support, with ACPI tables built in memory and reported to the OS.

Before passing control to an ACPI OS, firmware must select the SCI to IRQ mapping by programming the SCIS field (D31:F0:R58h[2:0]). SCI is disabled by default.

Offset 58h: ACTL – ACPI Control

<table>
<tr><td>2:0</td><td>SCI IRQ Select (SCIS): Specifies on which IRQ SCI will rout to. If not using APIC, SCI must be routed to IRQ9-11, and that interrupt is not sharable with SERIRQ, but is shareable with other interrupts. If using APIC, SCI can be mapped to IRQ20-23, and can be shared with other interrupts.
<table>
<tr><th>Bits</th><th>SCI Map</th><th>Bits</th><th>SCI Map</th></tr>
<tr><td>000</td><td>IRQ9</td><td>100</td><td>IRQ 20</td></tr>
<tr><td>001</td><td>IRQ10</td><td>101</td><td>IRQ 21</td></tr>
<tr><td>010</td><td>IRQ11</td><td>110</td><td>IRQ 22</td></tr>
<tr><td>011</td><td>SCI Disabled</td><td>111</td><td>IRQ 23</td></tr>
</table></td></tr>
</table>

4.9 Reporting Interrupt Routing to the OS

The PCI interrupt routing schemes for all motherboard and chipset internal devices, PCI expansion slots and PCI Express* slots behind the root ports are platform specific information. System firmware is required to report this information to the OS via the following interfaces:

- ACPI _PRT packages (per the ACPI Specification, in an ACPI environment)
- ACPI Multiple APIC Description Table (per ACPI Specification, in an ACPI environment)

Refer to these specifications for detailed formats of interrupt routing tables and data structures.

Refer to Section 12.0, "PCI IRQ Routing" on page 69 for details on interrupt routing.

4.10 Reporting IO/Memory Resources to the OS

Some of the memory and I/O address ranges used by internal devices are assigned by firmware using base address registers beyond the standard PCI header (above offset 40h), and thus is invisible to OS. Firmware must report such memory/I/O resource usage to OS through standard software interfaces to avoid potential system resource conflict.

Firmware should report the memory address range used by the Chipset Configuration space via UEFI memory table as 'EfiMemoryMappedIO' memory space (Type=11), and via ACPI _CRS object as motherboard resources, with the device ID of PNP0C02.

Firmware should report all of the I/O register space used by the ACPI, and GPIO devices to the OS by using PNP device node entries and by using ACPI _CRS object. They should be declared as Plug and Play motherboard resources with the Device ID of PNP0C02.

4.11 Chipset Sticky Registers

Sticky registers are registers whose contents are preserved during an Intel® Quark™ SoC X1000 warm reset. See definition of warm reset in the Intel® Quark™ SoC X1000 Datasheet.

Table 18. Op codes 06h/07h, Msg Port 31h, Offset 51h: CFGSTICKY_RW – Sticky Read/Write

Bit Range	Default & Access	Description
31:12	00000h RW	Reserved (RSVD): Reserved.
11:10	00b RW	Reserved (RSVD): Reserved.
9	0b RW	**Software Force Recovery (SW_FORCE_RECOVERY):** Set by software to indicate a critical error or security violation has been detected and system has warm reset to boot Recovery firmware image.
8:5	000b RW	Reserved (RSVD): Reserved.
4	0b	**RMU Warm Reset (RMU_WARM_RESET):** Set by RMU when it initiates a Warm Reset.
3	0b	**RMU Double ECC error detect (RMU_DECC_DETECT):** Set by RMU when it detects a double/multi bit ECC error.
2	0b	**RMU IMR access violation detect (RMU_IMR_VIOLATION):** Set by RMU when it detects a general Isolated Memory Regions (IMRs) access violation.
1	0b	**RMU HMBOUND access violation detect (RMU_HMB_VIOLATION):** Set by RMU when it detects a Host Memory I/O Boundary (HMBOUND) access violation.
0	0b	**RMU SMM access violation detect (RMU_SMM_VIOLATION):** Set by RMU when it detects a System Management Mode (SMM) access violation.

4.12 Boot Checklist

The following details the minimum steps necessary to boot using the Quark SoC:

- Control register CR0.NE must be set to 1 as FERR is not supported. Instead native mode will be used (interrupt 16 generated internally on FPU errors).
- Enable NMI operation (IO Port 070h bit 7 = 0).
- Enable SMI operation (Msg Port 3:Reg03h bit 13 = 1).
- Initialize the legacy SPI decode/enable registers according to platform design (D31:F0:RD0-D8h).
- Relocate and enable early memory for UEFI firmware use (Msg Port 5:Reg82h = 10000080h).
- Check resume status (WAKE, PM1_BLK+0, Bit[15]) and SLP_TYP (PM1_BLK + 04h, Bit[12:10]). If not resuming, take reset path.
- Initialize the non-standard BARs (details in Section 4.4.2).
- Program GPIO configuration.
- Call memory reference code to initialize system memory (details in Section 5.0).
- Shadow RMU binary to system memory (see Section 4.6 for details).
- Shadow firmware to system memory.
- Initialize the "Stage 1" registers in Table 13.
- Relocate SMBase, clear SMI status bits at GPE0BASE + 14h, and enable SMIs.
- If SMRAM caching is used then a cache flush (wbinvd) must be performed before exiting SMM. This is required since cache is external to CPU within a Intel® Quark™ SoC X1000.
- Initialize the "Stage 2" registers in Table 13.
- Perform PCI enumeration.
- Program Sub-System and Sub-Vendor ID in D31:F0:R2Ch. These values are used as the SSID/SVID for all internal PCI devices. Also program these registers in all PCI Express* devices per PCI specification.
- Initialize the "Stage 3" registers in Table 13.

4.13 Accessing Quark Platform Data System Flash Area

Intel® Quark™ SoC UEFI firmware provides an EDKII class library PlatformDataLib which allows platform PI PEI and PI DXE drivers to access the Quark specific Platform Data System Flash Area.

Platform data is an area of system flash with platform specific and unit specific personality data used to configure various platform components during system boot. This binary used to program system flash during manufacture is patched with this data during board manufacture, refer to the Intel® Quark™ SoC X1000 Board Support Package (BSP) Build and Software User Guide on patching flash binary file using a platform data file.

The Platform data area in system flash consists of a platform data area header followed by multiple platform data items of configuration data, each platform data item consists of an item header followed by the actual item configuration data bytes.

Table 19. Platform data area header

Field name	Field Length in byte	Data Type	Description
Identifier	4	UINT32	Area signature which corresponds to using the EDKII macro SIGNATURE_32 as follows: SIGNATURE_32 ('P', 'D', 'A', 'T')
Length	4	UINT32	Length of the platform data area excluding this header.
CRC	4	UINT32	CRC32 of the platform data area excluding this header.

Table 20. Platform data item header

Field name	Field Length in bytes	Data Type	Description
Identifier	2	UINT16	Unique identifier of data item. Corresponds to the value in the Identifier column of Table 21 **Values 0000h to 0fffh are reserved by Intel® for items common to Intel reference platforms and customer platforms.**
Length	2	UINT16	Length of data part of the data item.
Descripti on	10	UINT8 [10]	10 byte character array description of this item
Version	2	UINT16	Version of this item.

Table 21. Platform data items common to Intel® platforms and customer platforms

Identifier	Data Length in bytes (excluding item header)	Description
0	n/a	Reserved item.
1	2	UINT16 specifying platform type firmware is executing on. **Values 0000h to 0fffh are reserved for Intel® Reference Platform types**
2	TBD	Reserved item for future use as board serial number.
3	6	MAC Address for B0:D20:F6 South Cluster 10/100 Mbps Ethernet Device.
4	6	MAC Address for B0:D20:F7 South Cluster 10/100 Mbps Ethernet Device.
5	TBD	Reserved item for future use by Memory Reference Code (MRC).

Table 21. Platform data items common to Intel® platforms and customer platforms

Identifier	Data Length in bytes (excluding item header)	Description
6	39	Memory Reference Code (MRC) parameters used in Section 5.0 to initialize system memory. See Table 22
7	varies	UEFI Secure Boot auto provisioning item for UEFI 'pk' variable. *.cer,*.der or *.crt file which is a X509 public certificate in ASN.1 DER encoding format.
8	varies	1st Boot UEFI Secure Boot auto provisioning item for UEFI Secure Boot 'kek', 'db' or 'dbx' variables. It is expected there will be multiple instances of these items. See Table 23

Table 22. Platform Data Item: Memory Reference Code (MRC) parameters (Sheet 1 of 3)

Field Name	Byte Position	Field Length in byte	Data Type	Description
Platform identifier	00	2	UINT16	Platform ID sanity check to match against data value of item 1 in Table 21
Flags	02	4	UINT32	BIT[0]: ECC Enable BIT[1]: Scramble Enable BIT[2-4]: Reserved Bit[5]: DRAM Bit swapping enable BIT[6-31]: Reserved
Dram Width	06	1	UINT8	0=x8, 1=x16, others=RESERVED
Dram Speed	07	1	UINT8	0=DDRFREQ_800 others=RESERVED.
Dram Type	08	1	UINT8	0=DDR3,1=DDR3L, others=RESERVED.
Rank Mask	09	1	UINT8	bit[0] RANK0_EN, bit[1] RANK1_EN, others=RESERVED.
Chan Mask	0A	1	UINT8	bit[0] CHAN0_EN, others=RESERVED
Chan Width	0B	1	UINT8	1=x16, others=RESERVED
Addr Mode	0C	1	UINT8	0, 1, 2 (mode 2 forced if ecc enabled), others=RESERVED
SrInt	0D	1	UINT8	1=1.95us, 2=3.9us, 3=7.8us, others=RESERVED. REFRESH_RATE.
SrTemp	0E	1	UINT8	0=normal, 1=extended, others=RESERVED
Dram RonVal	0F	1	UINT8	0=34ohm, 1=40ohm, others=RESERVED RON_VALUE
Dram RttNom Value	10	1	UINT8	0=40ohm, 1=60ohm, 2=120ohm, others=RESERVED

Table 22. Platform Data Item: Memory Reference Code (MRC) parameters (Sheet 2 of 3)

Field Name	Byte Position	Field Length in byte	Data Type	Description
Dram RttWr Value	11	1	UINT8	0=off others=RESERVED
Soc RdOdt Value	12	1	UINT8	0=off, 1=60ohm, 2=120ohm, 3=180ohm, others=RESERVED.
Soc WrRon Value	13	1	UINT8	0=27ohm, 1=32ohm, 2=40ohm, others=RESERVED.
Soc WrSlew Rate	14	1	UINT8	0=2.5V/ns, 1=4V/ns, others=RESERVED.
Dram Density	15	1	UINT8	0=512Mb, 1=1Gb, 2=2Gb, 3=4Gb, others=RESERVED.
tRAS	16	4	UINT32	ACT to PRE command period in picoseconds.
tWTR	1A	4	UINT32	Delay from start of internal write transaction to internal read command in picoseconds.
tRRD	1E	4	UINT32	ACT to ACT command period (JESD79 specific to page size1K/ 2K) in picoseconds
tFAW	22	4	UINT32	Four activate window (JESD79 specific to page size 1K/2K) in picoseconds.
tCL	26	1	UINT8	DRAM CAS Latency in clocks.
BS0	27	1	UINT8	Bank select 0 swap value to use if bit swapping enabled (flag[5]).
BS1	28	1	UINT8	Bank select 1 swap value to use if bit swapping enabled.
BS2	29	1	UINT8	Bank select 2 swap value to use if bit swapping enabled.
MA0	2A	1	UINT8	Address 0 swap value to use if bit swapping enabled. Set to 0.
MA1	2B	1	UINT8	Address 1 swap value to use if bit swapping enabled. Set to 1.
MA2	2C	1	UINT8	Address 2 swap value to use if bit swapping enabled. Set to 2.
MA3	2D	1	UINT8	Address 3 swap value to use if bit swapping enabled.
MA4	2E	1	UINT8	Address 4 swap value to use if bit swapping enabled.
MA5	2F	1	UINT8	Address 5 swap value to use if bit swapping enabled.
MA6	30	1	UINT8	Address 6 swap value to use if bit swapping enabled.
MA7	31	1	UINT8	Address 7 swap value to use if bit swapping enabled.
MA8	32	1	UINT8	Address 8 swap value to use if bit swapping enabled.
MA9	33	1	UINT8	Address 9 swap value to use if bit swapping enabled.
MA10	34	1	UINT8	Address 10 swap value to use if bit swapping enabled. Set to A.
MA11	35	1	UINT8	Address 11 swap value to use if bit swapping enabled. Set to B.
MA12	36	1	UINT8	Address 12 swap value to use if bit swapping enabled. Set to C.
MA13	37	1	UINT8	Address 13 swap value to use if bit swapping enabled. Set to D.

Table 22. Platform Data Item: Memory Reference Code (MRC) parameters (Sheet 3 of 3)

Field Name	Byte Position	Field Length in byte	Data Type	Description
MA14	38	1	UINT8	Address 14 swap value to use if bit swapping enabled. Set to E.
MA15	39	1	UINT8	Address 15 swap value to use if bit swapping enabled. Set to F.

Notes:
1. The only values validated by Intel® for the above fields are the values used by MRC bin files which come as part of the Intel® Quark™ SoC BSP, refer to the Intel® Quark™ SoC X1000 Board Support Package (BSP) Build and Software User Guide.

Table 23. Platform Data Item: 1st Boot UEFI Secure Boot auto provisioning item for UEFI Secure Boot 'kek', 'db' or 'dbx' variable.

Field Name	Length	Data Type	Description
Header	4	struct	UINT8:StoreType: 1="kek", 2="db", 3="dbx",others=RESERVED. UINT8:SignatureType:0=X509 cert file, 1=32Byte SHA256 Digest,2=*.pbk Rsa2048 storing file, others=RESERVED UINT16:flags: bit[0] Have SignatureOwner guid, others=RESERVED
Signature Owner	16	guid	Optional GUID to identify individual Certificate / Signature stored in "kek", "db" or "dbx" SecureBoot variables
Signature Data	varies	file	Data to match Header.SignatureType

4.14 UEFI Firmware Sources

The following table lists the UEFI firmware sources related to the various sections in this chapter.

Section	Title	File Path	Function
4.1	Configuring Memory and MMIO Accesses	QuarkPlatformPkg\Library\QuarkSecLib\Ia32\Flat32.S	stackless_EarlyPlatformInit
		QuarkPlatformPkg\Library\QuarkSecLib\Ia32\Flat32.asm	stackless_EarlyPlatformInit
		QuarkPlatformPkg\Platform\Dxe\PlatformInit\PlatformConfig.c	PlatformConfigOnSmmConfigurationProtocol
4.2	Early Memory Setup	QuarkPlatformPkg\Library\QuarkSecLib\Ia32\Flat32.S	stackless_EarlyPlatformInit
		QuarkPlatformPkg\Library\QuarkSecLib\Ia32\Flat32.asm	stackless_EarlyPlatformInit
		QuarkPlatformPkg\Platform\Dxe\PlatformInit\PlatformConfig.c	PlatformConfigOnSmmConfigurationProtocol
4.3	Isolated Memory Regions (IMRs)	QuarkPlatformPkg\Platform\Pei\PlatformInit\MrcWrapper.c	SetPlatformImrPolicy
		QuarkPlatformPkg\Platform\Dxe\PlatformInit\PlatformConfig.c	PlatformConfigOnSmmConfigurationProtocol

Section	Title	File Path	Function
4.4	Initializing Chipset Registers	QuarkSocPkg\QuarkNorthCluster\Library\IntelQNCLib\IntelQNCLib.c	PeiQNCPreMemInit QNCLockSmramRegion PeiQNCPostMemInit
		QuarkPlatformPkg\Library\QuarkSecLib\Ia32\Flat32.S	stackless_EarlyPlatformInit
		QuarkPlatformPkg\Library\QuarkSecLib\Ia32\Flat32.asm	stackless_EarlyPlatformInit
		QuarkPlatformPkg\Platform\Pei\PlatformInit\MrcWrapper.c	GetMemoryMap
		QuarkPlatformPkg\Platform\Pei\PlatformInit\MemoryCallback.c	MemoryDiscoveredPpiNotify Callback
		QuarkPlatformPkg\Platform\Dxe\Setup\QNCRegTable.c	PlatformInitQNCRegs
		QuarkSocPkg\QuarkNorthCluster\Library\IntelQNCLib\PciExpress.c	QNCRootPortInit
		QuarkPlatformPkg\Platform\Pei\PlatformInit\PlatformEarlyInit.c	EarlyPlatformThermalSensorInit InitializeUSBPhy PcieControllerEarlyInit
		QuarkPlatformPkg\Platform\Pei\PlatformInit\PlatformErratas.c	PlatformErratasPostMrc
		QuarkPlatformPkg\Platform\Pei\PlatformInit\PlatformEarlyInit.c	EarlyPlatformInit
		QuarkPlatformPkg\Library\PlatformPcieHelperLib\PlatformPcieHelperLib.c	PlatformPciExpressEarlyInit
4.5	Remote Management Unit Binary	QuarkSocPkg\QuarkNorthCluster\Binary\QuarkMicrocode\RMU.bin	-
4.6	RMU Binary Relocation	QuarkPlatformPkg\Platform\Pei\PlatformInit\MrcWrapper.c	PostInstallMemory
		QuarkSocPkg\QuarkNorthCluster\Library\IntelQNCLib\IntelQNCLib.c	RmuMainRelocation
4.8	ACPI Support	QuarkPlatformPkg\Platform\Dxe\Setup\QNCRegTable.c	PlatformInitQNCRegs
		QuarkPlatformPkg\Acpi\Dxe\AcpiPlatform*.*	*.*
		QuarkPlatformPkg\Acpi\AcpiTables*.*	*.*
4.9	Reporting Interrupt Routing to the OS	QuarkPlatformPkg\Acpi\Dxe\AcpiPlatform\MadtPlatform.c	*.*
		QuarkPlatformPkg\Acpi\AcpiTables*.*	*.*
4.10	Reporting IO/ Memory Resources to the OS	QuarkPlatformPkg\Acpi\AcpiTables*.*	*.*
		QuarkSocPkg\QuarkNorthCluster\QNCInit\Dxe\QNCInit.c	QNCInitializeResource
		QuarkPlatformPkg\Pci\Dxe\PciHostBridge\PciHostBridge.c	InitializePciHostBridge
		QuarkSocPkg\QuarkNorthCluster\Spi\RuntimeDxe\PchSpi.c	InstallPchSpi
4.13	Accessing Quark Platform Data System Flash Area	QuarkPlatformPkg\Include\PlatformData.h	*.*
		QuarkPlatformPkg\Include\Library\PlatformDataLib.h	*.*
		QuarkPlatformPkg\Library\PlatformDataLib	*.*

§ §

5.0 DDR3 DRAM Configuration

This chapter supplements the information provided in the Intel® Quark™ SoC X1000 Datasheet for use by firmware vendors and Intel customers developing their own firmware for Quark SoC.

Register locations are referenced in this document, however, the current external design specification or data sheet should be used along with applicable specification updates for obtaining the current register and bit settings of the System Memory Controller.

This document will be supplemented from time to time with specification updates. The specification updates contain information relating to the latest programming changes and may also contain resolutions to known errata. Check with your Intel representative for availability of specification updates.

5.1 Intel® Quark™ SoC System Memory Controller

Quark SoC A0 supports single channel, memory down solution, organized as a single or two ranks of the same DDR3 devices.

For complete details on Intel® Quark™ SoC System Memory Controller capabilities and usage, refer to the Intel® Quark™ SoC X1000 Datasheet, specifically Section 1.2 and Section 13.0.

5.2 MRC Flow Selection

Memory Reference Code (MRC) is the DRAM/Memory-Controller initialization flow performed by Firmware before DRAM is enabled for functional access.

There are four basic types of MRC flows:

- Cold Boot Flow - After transition from G3, G2/S5, G1/S4 state, requires full System Memory Controller, DDRIO and DRAM initialization sequence and training. Also that flow should be executed on detection of DRAM initialization failure (when GPE0BLK.PMSW.DRAMI bit is set).
- S3 Exit Flow - After transition from G1/S3 state, DRAM is expected to be in self refresh and storing valid data. Training results from last cold boot are used for DDRIO configuration and scrambler vector from last cold boot is written to System Memory Controller.
- Warm Boot Flow- After warm reset some memory subsystem components retain configuration settings, some registers are locked, only partial initialization is required. Training results from last cold boot are used.
- Fast Cold Boot Flow - That is cold boot scenario assuming that memory configuration did not change since the last time. Saved training results are used. The flow must not be used if previous MRC execution indicates error (GPE0BLK.PMSW.DRAMI bit is set).

For further boot flow description they will be referenced as: cold, s3, warm and fast.

In order to detect power transition type, the firmware has to check PM1BLK.PM1S.WAKE and PM1BLK.PM1C.SLPTYPE registers.

The MRC code should use GPE0BLK.PMSW.DRAMI to indicate recent MRC execution status. The bit should be set on MRC entry and cleared on successful completion. This allows detecting memory initialization error and adopting the boot flow in case of failure.

The use of Fast Cold Boot Flow is up to firmware, and can be used to optimize boot performance.

5.3 Programming Considerations

Memory initialization requires programming of various registers within different system components. The register/data access is component specific.

See Section 3.1, "Message Network" on page 18.

The message port access is executed using MDR/MCR registers.

- D0:F0:RD0h MCR - Message Control Register
- D0:F0:RD4h MDR - Message Data Register

Table 24. Component-Specific Programming

Component	Access method	Port	Read opcode	Write opcode
PORT1 System Memory Controller registers	Message port	0x01	0x10	0x11
PORT5	Message port	0x05	0x10	0x11
DDRIO	Message port	0x12	0x06	0x07
MTE	Message port	0x11	0x10	0x11
System Memory Controller atomic command handler	Message port	0x01	--	0x68

5.4 Memory Controller Initialization

This section describes step by step memory initialization sequence, stating the relevance for individual boot flows (cold/S3/warm/fast).

5.4.1 Clear Self-Refresh

Boot flow affected: Cold, Fast, Warm, S3

Clear self-refresh status

- PORT1.PMSTS.DISR=1

5.4.2 Program DDR Timing Control

Boot flow affected: Cold, Fast, Warm, S3

Initialize PORT1 DTR0 through DTR4 timing control registers. Follow detailed content description found in the Intel® Quark™ SoC X1000 Datasheet.

Note: Traditionally DIMM memory characteristic is provided through SPD, that is, providing firmware independence from currently used memory chips. For the soldered down DDR3 chips, the memory characteristics are known at production time and can be hard-coded in the firmware.

5.4.3 Program Pre-JEDEC Rank Decoding

Boot flow affected: Cold, Fast

This step is preparing System Memory Controller for executing JEDEC memory initialization sequence.

Disable power saving features and self-refresh

- PORT1.DPMC0.CLKGTDIS = 1
- PORT1.DPMC0.DISPWRDN = 1
- PORT1.DPMC0.DYNSREN = 0
- PORT1.DPMC0.PCLSTO = 0

Disable out of order transactions

- PORT1.DSCH.OOODIS = 1
- PORT1.DSCH.NEWBYPDIS = 1

Disable issuing the REF command

- PORT1.DRFC.tREFI = 0

Disable ZQ calibration short

- PORT1.DCAL.ZQCINT = 0
- PORT1.DCAL.SRXZQCL = 0

Enable rank decoding (depending on ranks populated on the board)

- PORT1.DRP.rank0Enabled = 1
- PORT1.DRP.rank1Enabled = 1

5.4.4 Perform DDR Reset

Boot flow affected: Cold, Fast

Set COLDWAKE bit before sending the WAKE message (this step is used set up the DDR I/F prior to the JEDEC initialization and to take the System Memory Controller maintenance FSM out of the reset state).

- PORT1.DRMC.COLDWAKE = 1

Using message port access, send wake command (op-code 0xCA) to System Memory Controller (port address 0x01)

Restore default DRMC value

- PORT1.DRMC = 0

5.4.5 Initialize DDRIO

Boot flow affected: Cold, Fast, S3

Follow the reference code for the register programming sequence.

- The MPLL starts locking immediately after Power Good de-assertion assuming that the right clock dividers have been passed to the MPLL through straps. There is no FW action needed to lock the MPLL, but FW intervention is needed in getting the clocks out as the clocks are disabled by default.
- Configure DDR3 interface characteristics through DDRIO registers (specify CL, CWL, read ODT, write RON, write slew rate)
- After all the DDRIO configuration registers have been programmed, Initial RCOMP (DDR Buffer compensation) is enabled.
- After the Initial RCOMP is done, FW enables the clock alignment FSM by a configuration register write.
- FW enables the DDRIO TRANSMIT FIFO pointers.
- FW then sets the configuration register for IO_BUFFER_ACTIVATE that will enable the DDR IO buffers.
- FW writes a "1" to the configuration bit to set the DRAM_RESET pad to HIGH
- FW writes a "1" to the configuration bit to set the SPID_INIT_COMPLETE bit that is reflected back to the Memory Controller on the SPID interface.
- Now the DDRIO is ready to accept transactions on the SPID interface starting with the JEDEC initialization of the DDR memory devices.

5.4.6 Perform JEDEC Initialization

Boot flow affected: Cold, Fast

Firmware must ensure the initialization sequence meets JEDEC spec timing intervals. See *Reset and Initialization Sequence at Power-on Ramping* in [JESD79-3F] for details.

Assert RESET# for 200us

- DDRIO.CCDDR3RESETCTL.BIT8=0
- DDRIO.CCDDR3RESETCTL.BIT1=1
- Wait 200us
- DDRIO.CCDDR3RESETCTL.BIT8=1
- DDRIO.CCDDR3RESETCTL.BIT1=0

Set CKE signal for each populated memory rank

- PORT1.DRMC.CKEVAL[0] = 1
- PORT1.DRMC.CKEVAL[1] = 1 // only if 2nd rank populated
- PORT1.DRMC.CKEMODE = 1

Send NOP command to each populated rank (using System Memory Controller message for DRAM command (op-code 0x68))

Restore default DRMC value

- PORT1.DRMC = 0

For each populated memory rank send MR2, MR3, MR1, MR0 register values and execute ZQCL (using System Memory Controller message for DRAM command (op-code 0x68))

5.4.7 Signal Initialization Complete

Boot flow affected: Cold, Fast, Warm

Specify PRI interface owned by PORT5

- PORT1.DCO.PMICTL = 0

Indicate that initialization of the System Memory Controller has completed. Memory accesses are permitted and maintenance operation begins. Until this bit is set, the memory controller will not accept DRAM requests from the PORT5 or MTE.

- PORT1.DCO.IC = 1

5.4.8 Restore Timings

Boot flow affected: Fast, Warm, S3

Some NV storage is required for storing training results in order to avoid full training procedure on every reset. Assuming use of saved data from the last cold boot flow, program DDRIO settings for:

- Receive enable delay
- Read DQS delay
- Write DQS delay
- Write DQ delay
- Internal VREF value
- Write control delay
- Write clock delay

5.4.9 Disable Memory Caching

Boot flow affected: Cold

During memory training execution, if memory read or write cycles are triggered by the CPU, then caching has to be disabled. Depending on firmware flow, the original values have to be saved and restored after memory training is completed.

Disable DRAM caching

- CPU.CR0.CD = 1
- MTRR[DRAM_RANGE].TYPE = UC

Flush cache to DRAM

- PORT5.BCTRL.MISSVALIDENTRIES = 1
- PORT5.BWFLUSH.DIRTY_LWM = 0
- PORT5.BWFLUSH.DIRTY_HWM = 0
- PORT5.BDEBUG1 = 0
- PORT3.HWFLUSH.HWM = 0

5.4.10 Receive Enable Training

Boot flow affected: Cold

The procedure has to be executed for each memory rank and each byte lane.

Adjust internal receive enable signal to the center of the first DQS preamble cycle.

The DQS signal is generated by the DRAM in response to the read command. If the CPU is used to generate read cycles, then read timing has to be extended

- DTR1. tCCD = 1

in order to be able to sample DQS preamble.

Using default back-to-back transactions, it is not possible to capture DQS preamble. Single CPU memory read generates 4 read commands on the DDR interface, DQS samples are collected from the last read. After completed receive enable training, DTR1 settings have to be restored.

For individual byte lanes, the DQS sample is read from

- DDRIO.Reg0x0034.Bit0 - byte lane 0
- DDRIO.Reg0x0034.Bit1 - byte lane 1

For the purpose of the training algorithm, the representative sample value should be evaluated as the average of multiple samples.

The receive enable delay is expressed in 1/128 of memory clock cycle duration. The final value is the result of the following formula:

- DDRIO.Reg0x0070.Bit[11:08]*64 + DDRIO.Reg0x003C.Bit[29:24] - byte lane 0
- DDRIO.Reg0x0070.Bit[23:20]*64 + DDRIO.Reg0x0038.Bit[29:24] - byte lane 1

Dead band adjust (additional configuration is required if delay is outside of certain limits, otherwise referenced bits should be set to zero).

If DDRIO.Reg0x003C.Bit[29:24] is less than 0x12 or greater than 0x34 then

- DDRIO.Reg0x007C.Bit5 = 1

If DDRIO.Reg0x003C.Bit[29:24] is less than 0x12 then

- DDRIO.Reg0x007C.Bit11 = 1

If DDRIO.Reg0x0038.Bit[29:24] is less than 0x12 or greater than 0x34 then

- DDRIO.Reg0x007C.Bit2 = 1

If DDRIO.Reg0x0038.Bit[29:24] is less than 0x12 then

- DDRIO.Reg0x007C.Bit8 = 1

Algorithm overview:

- Start with arbitrary delay
- Increase delay with small steps in order to detect DQS sample change 0'1
- Increase delay by 32 to place in center of high pulse
- Decrease delay by 128 (entire memory clock) until zero is sampled (i.e. DQS preamble)
- Increase delay by 32 to position receive enable at the middle of the DQS preamble cycle

- As the setting is common for both ranks, the final result must be the average.

5.4.11 Write Leveling Training

Boot flow affected: Cold

The procedure has to be executed for each memory rank and each byte lane.

Adjust write DQS signal delay to DRAM clock (fine write leveling).

Adjust write DQ delay to write DQS signal in order to get write and read consistency for simple data patterns (coarse write leveling).

Fine write leveling

The write DQS delay is expressed in 1/128 of memory clock cycle duration. The final delay is result of the following formula:

- DDRIO.Reg0x0070.Bit[07:04]*64 + DDRIO.Reg0x003C.Bit[21:16] - byte lane 0
- DDRIO.Reg0x0070.Bit[19:16]*64 + DDRIO.Reg0x0038.Bit[21:16] - byte lane 1

Dead band adjust (additional configuration is required if delay is outside of certain limits, otherwise referenced bits should be set to zero).

If DDRIO.Reg0x003C.Bit[21:16] is less than 0x12 or greater than 0x34 then

- DDRIO.Reg0x007C.Bit1 = 1

If DDRIO.Reg0x003C.Bit[21:16] is less than 0x12 then

- DDRIO.Reg0x007C.Bit4 = 1

If DDRIO.Reg0x0038.Bit[21:16] is less than 0x12 or greater than 0x34 then

- DDRIO.Reg0x007C.Bit7 = 1

If DDRIO.Reg0x0038.Bit[21:16] is less than 0x12 then

- DDRIO.Reg0x007C.Bit10 = 1

In write leveling mode, the memory is providing internal clock state on the DQ lines as it is latched by the rising edge of write DQS signal. The sample of DQ signals can be read from:

- DDRIO.Reg0x0034.Bit8 - byte lane 0
- DDRIO.Reg0x0034.Bit9 - byte lane 1

Algorithm

- Perform a single PRECHARGE ALL command to make DRAM state machine go to IDLE state
- Enable write leveling mode in MRS1
- Set PORT1.DTR4.ODTDIS = 1 (ODT disable)
- Configure DDRIO write leveling mode
  - DDRIO.Reg0x009C = ((DDRIO.Reg0x009C & 0x100003FC) | 0x10000154)
  - DDRIO.Reg0x5830.Bit16 = 1
- Set arbitrary delay for write DQS signal
- Increase delay with small steps in order to detect DQ sample change 0'1
- Cancel DDRIO write leveling mode

  - DDRIO.Reg0x5830.Bit16 = 0
  - DDRIO.Reg0x009C = ((DDRIO.Reg0x009C & 0x100003FC) | 0x00000154)
- Set PORT1.DTR4.ODTDIS = 0 (ODT enable)
- Disable write leveling mode in MRS1
- Perform a single PRECHARGE ALL command to make DRAM state machine go to IDLE state

Coarse write leveling

During coarse write leveling, write DQ delay has to be set ¼ DCLK (128/4 = 32 units) earlier than write DQS, then write DQS is moved by the whole DCLK (128 units) until read data is matching write data. Simple (low frequency) data pattern has to be used for write/read test.

The delay has to be adjusted for each byte lane, and finally the average (per byte lane) from all ranks has to be programmed.

The write DQ delay is expressed in 1/128 of memory clock cycle duration. The final value is the result of the following formula:

- DDRIO.Reg0x0070.Bit[03:00]*64 + DDRIO.Reg0x003C.Bit[13:08] - byte lane 0
- DDRIO.Reg0x0070.Bit[15:12]*64 + DDRIO.Reg0x0038.Bit[13:08] - byte lane 1

Dead band adjust (additional configuration is required if delay is outside of certain limits, otherwise referenced bits should be set to zero).

If DDRIO.Reg0x003C.Bit[13:08] is less than 0x12 or greater than 0x34 then

- DDRIO.Reg0x007C.Bit0 = 1

If DDRIO.Reg0x003C.Bit[13:08] is less than 0x12 then

- DDRIO.Reg0x007C.Bit3 = 1

If DDRIO.Reg0x0038.Bit[13:08] is less than 0x12 or greater than 0x34 then

- DDRIO.Reg0x007C.Bit6 = 1

If DDRIO.Reg0x0038.Bit[13:08] is less than 0x12 then

- DDRIO.Reg0x007C.Bit9 = 1

5.4.12 Read Training

Boot flow affected: Cold

The procedure has to be executed for each memory rank and each byte lane.

Find available margins for internal VREF value and read DQS delay and position these signals in the "eye" center. The margining is executed by verifying successful read of random write patterns.

Algorithm

- (A) Starting from min VREF, find min working read DQS passing write/read test. Increase VREF if no valid read DQS can be found.
- (B) Starting from min VREF, find max working read DQS. Increase VREF if no valid read DQS can be found.
- (C) Starting from max VREF, find min working read DQS. Decrease VREF if no valid read DQS can be found.

- (D) Starting from max VREF, find max working read DQS. Decrease VREF if no valid read DQS can be found.
- Calculate average read DQS for min working VREF (using A & B step results)
- Calculate average read DQS for max working VREF (using C & D step results)
- Configure final read DQS using average from above results
- Calculate average VREF for min read DQS (using A & C step results)
- Calculate average VREF for max read DQS (using B & D step results)
- Configure final VREF using average from above results

  Note: Finally average result from each rank should be used.

The read DQS delay is expressed in 1/128 of memory clock cycle duration. The final value is result of the following formula:

- DDRIO.Reg0x005C.Bit[06:00] - byte lane 0
- DDRIO.Reg0x0058.Bit[06:00] - byte lane 1

The value of VREF is programmed in the following register:

- DDRIO.Reg0x0014.Bit[07:02] - byte lane 0
- DDRIO.Reg0x0024.Bit[07:02] - byte lane 1

Min to max VREF encoding: 0x3F, …,0x20, 0x00, …,0x1F

5.4.13 Write Training

Boot flow affected: Cold

The procedure has to be executed for each memory rank and each byte lane.

Find available margins for write DQ signal and position it in the "eye" center. The margining is executed by verifying successful write of random data patterns.

Algorithm

- Starting from write DQ delay configured ¼ DCLK earlier than write DQS (using the results from coarse write leveling), find min and max write DQ delay passing the write/read test.
- Configure final write DQ delay as the average of the above results

5.4.14 Store Timings

Boot flow affected: Cold

Training results collected during cold boot flow should be saved in some NV storage for later use (i.e. for Fast, Warm, and S3 flows, see Section 5.4.8, “Restore Timings” on page 43).

5.4.15 Enable Scrambling

Boot flow affected: Cold, Fast, Warm, S3

If scrambling is enabled by platform designer/owner, then the Firmware should load a new, random scrambler vector every cold boot. At S3 Exit, the Firmware must load the same vector loaded in the last cold boot since the DRAM is expected to contain valid data and the same scrambler vector that was used to write the data into the DRAM is needed to unscramble it.

- PORT1.SCRMSEED = random_value

5.4.16 Program Execution Control

Boot flow affected: Cold, Fast, Warm, S3

Configure power management

- PORT1.DPMC0.CLKGTDIS = 0
- PORT1.DPMC0.DISPWRDN = 0
- PORT1.DPMC0.PCLSTO = 4
- PORT1.DPMC0.PREAPWDEN = 1

Configure scheduler control registers

- PORT1.DSCH.OOODIS = 0
- PORT1.DSCH.OOOST3DIS = 0
- PORT1.DSCH.NEWBYPDIS = 0

5.4.17 Configure Rank Population

Boot flow affected: Cold, Fast, Warm, S3

After training is completed, configure System Memory Controller rank population register specifying: enabled ranks, device width, density, and address mode.

- PORT1.DCO.IC = 0
- PORT1.DRP.rank0Enabled = 1
- PORT1.DRP.rank1Enabled = rank1_present
- PORT1.DRP.dimm0DevWidth = dev0_width
- PORT1.DRP.dimm1DevWidth = dev1_width
- PORT1.DRP.dimm0DevDensity = dev0_density
- PORT1.DRP.dimm1DevDensity = dev1_density
- PORT1.DRP.addressMap = address_mode

Signal initialization complete

- PORT1.DCO.IC = 1

5.4.18 Perform Wake

Boot flow affected: Warm, S3

Using Message Network+, send the wake command (op-code 0xCA) to System Memory Controller (port address 0x01)

5.4.19 Change Refresh Period

Boot flow affected: Cold, Fast, Warm, S3

Configure refresh rate and short ZQ calibration interval. Activate dynamic self-refresh.

- PORT1.DRFC.tREFI = refresh_rate
- PORT1.DRFC.REFDBTCLR = 1

- PORT1.DCAL.ZQCINT = 3
- PORT1.DPMC0.ENPHYCLKGATE = 1
- PORT1.DPMC0.DYNSREN = 1

5.4.20 Set Periodic Compensation

Boot flow affected: Cold, Fast, Warm, S3

Configure DDRIO for Periodic Compensations, Dynamic Diff-Amp

Enable Periodic RCOMPS

- DDRIO.Reg0x6800.BIT1 = 1

Enable Dynamic Diff-Amp and ODT

- DDRIO.Reg0x0094 &= ~0x3FFC00
- DDRIO.Reg0x0098 &= ~0x3FFC00

For each populated rank sent ZQCS command

- MDR = (RNK << 22) | 6
- MCR = 0x680100F0

Reset internal DDRIO FIFO pointers

- DDRIO.Reg0x0074.BIT8 = 0
- DDRIO.Reg0x0074.BIT8 = 1

5.4.21 Enable ECC

Boot flow affected: Cold, Fast, Warm, S3

Depending on configuration enable ECC support. Note that some Intel® Quark™ SoC SKUs do not support ECC. Even if ECC is supported by the silicon, the designer may decide not to use it because of boot performance impact (required entire memory cleanup for initial ECC reset) or because of related memory bandwidth and size limitation.

Force settings required for ECC

- PORT1.DRP.addressMap = 2
- PORT1.DRP.split64 = 1
- PORT1.DSCH.NEWBYPDIS = 1

Enable ECC

- PORT1.DECCCTRL.SBEEN = 1
- PORT1.DECCCTRL.DBEEN = 1
- PORT1.DECCCTRL.ENCBGEN = 1

Available memory size is decreased as part of it is used to store ECC, and is not available for use by the system (refer to the Intel® Quark™ SoC X1000 Datasheet for details).

- AvailableMemSize = ActualMemSize * 7 / 8

Clear available memory in order to initialize ECC (except of S3 flow, as memory content has to be preserved).

5.4.22 Memory Test

Boot flow affected: Cold, Fast, Warm

Memory test is optional. In case of Fast/Warm boot flows, as recovery from the test failure, the complete memory training might be executed.

5.4.23 Lock Registers

Boot flow affected: Cold, Fast, Warm, S3

For security purposes, at the end of memory initialization, changes to the DRP register and MTE access must be disabled.

- PORT1.DCO.PMIDIS = 0
- PORT1.DCO.PMICTL = 0
- PORT1.DCO.DRPLOCK = 1
- PORT1.DCO.REUTLOCK = 1

5.5 Memory Training Engine

The MTE (Memory Training Engine) is part of the System Memory Controller. It can be used during memory initialization and training as it offers better performance comparing to CPU driven memory access. The reference code provides primitive functions supporting:

- ECC initialization - Fill memory with fixed pattern
- Memory test - Write, and then read/verify entire memory using fixed pattern
- Coarse write leveling - Write, and then read/verify at specified address, using low frequency pattern
- Read and write training - Write, and then read/verify at specified address, using variable random patterns

The control over DDR interface, SoC vs. MTE, depends on the PORT1.DCO.PMICTL bit state.

5.6 Memory Reference Code Configuration

Intel® Quark™ SoC MRC is implemented in the MemoryInitPei component, being part of QuarkSocPkg package. The memory controller initialization is performed by MemoryInit function with respect to the current boot flow mode. That function is executed at the end of PEI phase (indirectly through the service protocol interface call). The platform specific code has to provide all required input data through the MRC_PARAMS structure (see definition in QuarkSocPkg\QuarkNorthCluster\MemoryInit\Pei\mrc.h).

The MRC_PARAMS structure input data to the MRC is set up by the MemoryInit, `MrcConfigureFromMcFuses` and `MrcConfigureFromInfoHob` of QuarkPlatformPkg\Platform\Pei\PlatformInit\MrcWrapper.c

The reference platform design assumes "memory down" solution, thus the configuration is fixed for a specific platform, and no external or discrete SPD data is used.

Certain parameters may be fixed by silicon fuses (see `MrcConfigureFromMcFuses`). Configurable parameters are modified using platform data stored in legacy SPI flash. For example, configurable parameters include number of populated ranks, DDR width, density, clock speed, etc. The default timing parameters are based on JESD79-3E specification and are specific to DDR clock speed and data bus width. Table 22 defines MRC configuration parameters stored in platform data. Refer to Section 4.13 and *Intel® Quark™ SoC X1000 Board Support Package (BSP) Build and Software User Guide* for more details on platform data.

5.6.1 Memory Reference Code Bit Swapping

Memory Reference Code supports bit swapping on Bank Select and Memory address lines. DRAM bit/pin swapping in hardware can be used to optimize physical routing between the memory controller and physical DIMMs for signal integrity purposes and to ease routing in general. As a general rule swapping is allowed on:

DQ[7:0]: between ranks and within devices of the same rank - within the byte boundaries i.e. the corresponding strobe - DQS must be always controlling its designated DQ bits within each rank.

BS[2:0]: between ranks, BUT NOT between the devices of the same rank.

ADDR[9:3]: between ranks, BUT NOT between the devices of the same rank.

Any bit swapping made on the Data Lines (DQ) does not require modification in MRC as the remapping made happens during both write and read operations, hence is being canceled out automatically. If DRAM bit swapping is enabled, then DRAM bit swapping table information is read by MRC from platform data region, for more details refer to Section 4.13.

Example DRAM bit swapping:

- SoC Bank select pin 0 mapped to DIMM Bank select pin 1 (and vice-versa)
- SoC Memory address pin 4 mapped to DIMM Memory address pin 3 (and vice-versa)
- SoC Memory address pin 5 mapped to DIMM Memory address pin 6 (and vice-versa)
- SoC Memory address pin 7 mapped to DIMM Memory address pin 8 (and vice-versa).

Platform data region should be modified to match bit swapping in hardware, for example:

Table 25. Memory Reference Code Bit Swapping

Field Name	BS0	BS1	BS2	MA0	MA1	MA2	MA3	MA4	MA5	MA6	MA7	MA8	MA9	MA10	MA11	MA12	MA13	MA14	MA15
Byte Val	1	0	2	0	1	2	4	3	6	5	8	7	9	A	B	C	D	E	F

Note: Memory reference code internally only supports bit swapping on Memory address bits [9:3], other address bits are left unmodified.

For more details on MRC support for DRAM bit swapping, refer to the Intel® Quark™ SoC *X1000 Platform – MRC Swapping Code Example White Paper, document number: 331623*

5.7 UEFI Firmware Sources

The following table lists the UEFI firmware sources related to the various sections in this chapter.

Section	Title	File Path	Function/structures
5.0 DDR3 DRAM Configuration		QuarkSocPkg\QuarkNorthCluster\MemoryInit\Pei*.*	*.*
		QuarkPlatformPkg\Platform\Pei\PlatformInit\MrcWrapper.c	MemoryInit
		QuarkPlatformPkg\Platform\Pei\PlatformInit\MrcWrapper.c	MrcConfigureFromMcFuses
		QuarkPlatformPkg\Platform\Pei\PlatformInit\MrcWrapper.c	MrcConfigureFromInfoHob
		QuarkPlatformPkg\include\PlatformData.h	PDAT_MRC_ITEM structure

§ §

6.0 CPUID Instruction

For a detailed description of the CPUID instruction format, please refer to the *Intel® Architecture Software Developer's Manual*. This section provides additional documentation specific to the Quark SoC. The UEFI firmware should use the CPUID instruction to identify the Quark SoC.

Two sets of functions are supported: standard functions, and extended functions. The standard functions are 0000_0000h - 0000_000Bh. The extended functions are 8000_0000h and above.

6.1 CPUID Functions

Quark SoC UEFI firmware uses the CPUID instruction to determine what features are supported by the Quark SoC. The UEFI firmware should validate the Vendor-ID before executing additional CPUID functions (must return 'GenuineIntel'). Table 26 lists the CPUID functions supported on Quark SoC.

Table 26. Intel® Quark™ SoC CPUID Functions (Sheet 1 of 2)

CPUID Function Number (EAX Value)	Returned on Intel® Quark™ SoC	Description
0x00000000	EAX=0x00000007	Largest standard CPUID function number supported.
	EBX=0x756E6547	'uneG'. Part of 'GenuineIntel' string
	ECX=0x6C65746E	'letn'. Part of 'GenuineIntel' string
	EDX=0x49656E69	'Ieni'. Part of 'GenuineIntel' string
0x00000001	EAX=0x00000590	Family ID=0x5, Model=0x9, Stepping ID=0x0
	EBX=0x00010000	[7:0] = Brand ID. [15:8] = CLFLUSH line size. [23:16] = Maximum number of logical processors per package. [31:24] = Default APIC ID.
	ECX=0x00000000	Features supported
	EDX=0x8000237B	[0] = FPU on chip [1] = Virtual 8086 mode enhancements [3] = PSE. Page Size Extension. Large pages of size 4MB are supported including CR4.PSE [4] = TSC. Time Stamp Counter. RDTSC instruction is supported including CR4.TSD for controlling privilege. [5] = MSR. Model Specific Register RDMSR/ WRMSR instructions. [6] = PAE. Physical Address Extension. [8] = CMXCHG8B instruction support. [9] = APIC. APIC on chip [13] = PGE. Page Global Bit [31] = PBE. Pending Break Event.

Table 26. Intel® Quark™ SoC CPUID Functions (Sheet 2 of 2)

CPUID Function Number (EAX Value)	Returned on Intel® Quark™ SoC	Description
0x00000002	EAX=0x00000001	[0] = Number of CPUIDs No cache information to report.
	EBX=0x00000000	No cache information to report.
	ECX=0x00000000	No cache information to report.
	EDX=0x00000000	No cache information to report.
0x00000003 - 0x00000006	EAX=0x00000000	
	EBX=0x00000000	
	ECX=0x00000000	
	EDX=0x00000000	
0x00000007 (and ECX=0x00000000)	EAX=0x00000001	Maximum number of supported leaf 7 sub leaves
	EBX=0x00000080 or 0x00000000	[7] = SMEP
	ECX=0x00000000	
	EDX=0x00000000	
0x00000007 (and ECX!=0x00000000)	EAX=0x00000000	
	EBX=0x00000000	
	ECX=0x00000000	
	EDX=0x00000000	
0x80000000	EAX=0x80000008	Maximum extended CPUID function
	EBX=0x00000000	
	ECX=0x00000000	
	EDX=0x00000000	
0x80000001	EAX=0x00000000	
	EBX=0x00000000	
	ECX=0x00000000	
	EDX=0x00100000 or 0x00000000	[20] = Execute Disable available. 0: if IA32_MISC_ENABLES[34]=1 1: if IA32_MISC_ENABLES[34]=0
0x80000002 - 0x80000007	EAX=0x00000000	
	EBX=0x00000000	
	ECX=0x00000000	
	EDX=0x00000000	
0x80000008	EAX=0x00002020	[7:0] = Physical address width [15:8] = Linear address width
	EBX=0x00000000	
	ECX=0x00000000	
	EDX=0x00000000	

6.2 UEFI Firmware Sources

The following table lists the UEFI firmware sources related to the various sections in this chapter.

Section	Title	File Path	Function
6.1	CPUID Functions	MdePkg\Library\BaseLib\Ia32\CpuId.c	AsmCpuid

§ §

7.0 Model Specific Registers

Quark SoC supports a subset of Model Specific Registers (MSRs). These MSRs and the supported bits are listed in Table 27.

Table 27. Model Specific Registers

Name	Address	Feature	Bit definition
IA32_TSC	0x10	Time Stamp Counter	This is a 64-bit counter that increments with the core clock frequency.
IA32_MISC_ENABLE	0x1A0	PAE/XD	[22]=Limit CPUID [34]=XD Disable All other bits are reserved. Writing of 1'b1 to reserved bits causes #GP(0) Fault.
IA32_EFER	0xC000_0080	PAE/XD	[11] - NXE - Execute Disable bit Enable. All other bits are reserved. Writing of 1'b1 to reserved bits causes #GP(0) Fault.

UEFI firmware must ensure IA32_MISC_ENABLE[22]=0 so that all CPUID functions are reported.

7.1 UEFI Firmware Sources

The following table lists the UEFI firmware sources related to the various sections in this chapter.

Section	Title	File Path	Function
7.0	Model Specific Registers	IA32FamilyCpuBasePkg\CpuMpDxe\LimitCpuIdValue.c	MaxCpuidLimitReg
		QuarkSocPkg\Override\MdePkg\Library\BaseLib\ReadMsr64.c	AsmReadMsr64
		QuarkSocPkg\Override\MdePkg\Library\BaseLib\WriteMsr64.c	AsmWriteMsr64
		QuarkSocPkg\Override\MdePkg\Library\BaseLib\QuarkMsr.c	TranslateMsrIndex
		MdePkg\Library\BaseLib\Ia32\ReadTsc.c QuarkSocPkg\Override\MdePkg\Library\BaseLib\Ia32\GccInline.c	AsmReadTsc

§ §

8.0 System Management Mode (SMM)

System Management Mode (SMM) is a high priority mode of the Quark SoC that is entered when the Quark SoC acknowledges a System Management Interrupt (SMI). When the Quark SoC enters SMM it writes the current state of the Quark SoC (the Quark SoC's context) to memory and begins executing specialized UEFI firmware code. When entering SMM the Quark SoC is in a mode similar to real-address mode except there are no privilege levels or address mapping. The main benefit of SMM is that it offers a distinct and easily isolated processor environment that operates transparently to the operating system or executive and software applications. SMM has proven valuable as a mechanism for working around various system issues and also for power management handling. However, if not used correctly, SMM has the ability to cause unexpected system behavior, poor system performance and even crash/hang the operating system.

The Quark SoC introduces new capabilities and requirements for SMM. This chapter discusses UEFI firmware changes required to supported SMM.

For a detailed overview of SMM, refer to the *Intel® 64 and IA-32 Architectures Software Developer's Manual, Volume 3A: System Programming Guide, Part 1.*

8.1 Initializing SMM

During the boot process, the bootstrap processor (BSP) is responsible for:

- Configuring the chipset controls (see SMM Control in Table 12) for the SMM region.
- Copying the runtime SMM handler to the TSEG.
- Copying the SMM relocation handler to 30000h + 8000h.
- Invoking an SMI IPI (Inter Processor Interrupt, see Section 16.0) to self to execute the SMM relocation handler.
- Resume execution of the boot process.

Since the BSP initialized the chipset and installed the runtime SMM handler, the application processors (APs) must:

- Send an SMI IPI to self to execute the SMM relocation handler. This first SMI will cause the Quark SoC to vector to 30000h + 8000h.
- Resume execution of the multiprocessor initialization.

8.1.1 Responsibilities of the SMM Relocation Handler

For each logical processor, the first SMI it receives after a reset will cause the processor to vector to 30000h + 8000h. This is the default SMBASE for all Intel processors. UEFI firmware is responsible for relocating this default SMBASE to be located in TSEG memory space. Each logical processor must be assigned a unique SMBASE in TSEG. Thus, UEFI firmware installs the SMM Relocation Handler at this default SMBASE. The SMM relocation handler is responsible for:

— **Assigning each processor a unique SMBASE.** The SMBASE is only configurable while in SMM and must be written to the SMBASE register which is part of the processor context saved when the SMI was acknowledged. The SMBASE register during this first SMI is located at memory address 30000h + (8000h + 7EF8h). Subsequent SMIs will cause the processor to vector to the new SMM entry point which is SMBASE + 8000h. The minimum distance between adjacent SMBASE assignments is 200h (512) bytes. The Quark SoC SMBASE must be aligned on a 32KB boundary.

— **Configuring the System Management Mode Range Registers (SMRR).** The SMRR maps the cacheability of the runtime SMM handler. The runtime handler must be located in TSEG. The SMRRs enhance SMM by making the SMM memory cacheable upon acknowledging an SMI. The SMRR is used to define the cacheability type of all of the TSEG. SMRAM base and size must be aligned on a power of 2 boundary. Since TSEG is now cacheable when the processor is writing its context, entry and exit of the runtime SMM handler should be faster. Refer to Section 9.2.1 for additional details.

During the boot process, the UEFI firmware must initialize the SMBASE for each logical processor in the Quark SoC. Each logical processor must be assigned a unique SMBASE aligned on a 32KB boundary. The SMBASE for a logical processor must maintain at least 200h address separation from another logical processor's SMBASE.

The address selected for SMBASE relocation must not overlap fixed Local APIC range (FEE00000h-FEEFFFFFh).

8.2 SMM Revision Identifier

Upon entering SMM, the UEFI firmware must check the SMMREV_ID register located at SMBASE + 8000h + 7EFCh. The Quark SoC supports a SMMREV_ID of 3_0000h.

8.3 SMM State Save Map

The Quark SoC supports 32-bit SMM State Save Map.

Table 28. SMRAM State Save Map (Sheet 1 of 2)

Offset (Added to SMBASE + 8000H)	Register	Writable?
7FFCH	CR0	No
7FF8H	CR3	No
7FF4H	EFLAGS	Yes
7FF0H	EIP	Yes
7FECH	EDI	Yes
7FE8H	ESI	Yes
7FE4H	EBP	Yes
7FE0H	ESP	Yes
7FDCH	EBX	Yes
7FD8H	EDX	Yes
7FD4H	ECX	Yes
7FD0H	EAX	Yes
† The two most significant bytes are reserved.		

Table 28. SMRAM State Save Map (Sheet 2 of 2)

Offset (Added to SMBASE + 8000H)	Register	Writable?
7FCCH	DR6	No
7FC8H	DR7	No
7FC4H	TR†	No
7FC0H	Reserved	No
7FBCH	GS†	No
7FB8H	FS†	No
7FB4H	DS†	No
7FB0H	SS†	No
7FACH	CS†	No
7FA8H	ES†	No
7FA4H	I/O State Field	No
7FA0H	I/O Memory Address Field	No
7F9FH-7F03H	Reserved	No
7F02H	Auto HALT Restart Field (Word)	Yes
7F00H	I/O Instruction Restart Field (Word)	Yes
7EFCH	SMM Revision Identifier Field (Doubleword)	No
7EF8H	SMBASE Field (Doubleword)	Yes
7EF7H - 7E00H	Reserved	No
† The two most significant bytes are reserved.		

8.4 SMRR Configuration Requirements

Configuring the SMRR registers only occurs during the first SMI per logical processor where SMM relocation of the SMBASE is accomplished. SMRR configuration is NOT executed with each subsequent SMI.

Note: Configuration of SMRR is discussed in Section 9.2.1. SMRR can only be configured while the processor is in SMM and executing the SMM relocation handler.

8.5 UEFI Firmware Sources

The following table lists the UEFI firmware sources related to the various sections in this chapter.

Section	Title	File Path	Function
8.1	Initializing SMM	QuarkPlatformPkg\Platform\Pei\PlatformInit\MrcWrapper.c	GetMemoryMap
		QuarkSocPkg\\QuarkNorthCluster\Library\IntelQNCLib\IntelQNCLib.c	QNCGetTSEGMemoryRange
		QuarkSocPkg\QuarkNorthCluster\Library\IntelQNCLib\IntelQNCLib.c	QNCOpenSmramRegion
		QuarkSocPkg\QuarkNorthCluster\Library\IntelQNCLib\IntelQNCLib.c	QNCCloseSmramRegion
		QuarkSocPkg\QuarkNorthCluster\Library\IntelQNCLib\IntelQNCLib.c	QNCLockSmramRegion
		IA32FamilyCpuBasePkg\PiSmmCpuDxeSmm\Ia32\SmmInit.asm IA32FamilyCpuBasePkg\PiSmmCpuDxeSmm\Ia32\SmmInit.S	SmmStartup
		IA32FamilyCpuBasePkg\PiSmmCpuDxeSmm\PiSmmCpuDxeSmm.c	SmmRelocateBases SmmInitHandler FindSmramInfo
		IA32FamilyCpuBasePkg\PiSmmCpuDxeSmm\Ia32\SmiEntry.asm IA32FamilyCpuBasePkg\PiSmmCpuDxeSmm\Ia32\SmiEntry.S	_SmiEntryPoint
		IA32FamilyCpuBasePkg\PiSmmCpuDxeSmm\MpService.c	SmiRendezvous
		IA32FamilyCpuBasePkg\PiSmmCpuDxeSmm\SmmFeatures.c	IsSmrrSupported PentiumInitSmrr DisableSmrr PentiumEnableSmrr
8.2	SMM Revision Identifier	IntelFrameworkPkg\Include\Protocol\SmmCpuSaveState.h	EFI_SMM_CPU_STATE32.SMMRevId
		IA32FamilyCpuBasePkg\PiSmmCpuDxeSmm\PiSmmCpuDxeSmm.c	SmmReadSaveState
8.3	SMM State Save Map	IntelFrameworkPkg\Include\Protocol\SmmCpuSaveState.h	EFI_SMM_CPU_STATE32
		IA32FamilyCpuBasePkg\PiSmmCpuDxeSmm\PiSmmCpuDxeSmm.c	SmmReadSaveState
8.4	SMRR Configuration Requirements	IA32FamilyCpuBasePkg\PiSmmCpuDxeSmm\SmmFeatures.c	SmmInitiFeatures

§ §

9.0 Cache Control

9.1 MTRR Programming

Quark SoC does not support MSR MTRRs. Fixed and Variable range MTRRs are accessed via the Message Network Registers (refer to Section 4.4) and not the traditional MSR mechanism. Refer to the Intel® Quark™ SoC X1000 Datasheet for more details. The following are the Cache types supported by the Quark SoC.

Table 29. Supported Cache Types

Cache Type	MTRR Encoding	Description
UC	00h	Un Cached
WT	04h	Write Through
WB	06h	Write Back

In addition to setting up the decoding of the E0000h and F0000h segments, system firmware should also program the MTRR (Memory Type Range Registers), which are part of the Quark SoC. The following are the suggested MTRR settings for various memory regions.

Note: The programming described in Table 30 assumes a default cache type of UC (default in all modern processors).

Table 30. Memory Map and MTRR Programming Example (Sheet 1 of 2)

Memory Range	Description	MTRR Setting	MTRR Encoding	MTRR Used for Configuration
0h-9FFFFh	640KB Main memory	WB	06	MTRRfix64K_0000 MTRRfix16K_8000
A0000h – AFFFFh	64KB Legacy video frame buffer	UC	00	MTRRfix16K_A0000
B0000h – BFFFFh	64KB Legacy video frame buffer	UC	00	MTRRfix16K_B0000
C0000h – C7FFFh	32KB Expansion ROM	UC	00	MTRRfix4K_C0000
C8000h – CFFFFh	32KB Expansion ROM	UC	00	MTRRfix4K_C8000
D0000h – DFFFFh	64KB Expansion ROM	UC	00	MTRRfix4K_D0000 MTRRfix4K_D8000
E0000h – EFFFFh	64KB Extended System Firmware	UC	00	MTRRfix4K_E0000 MTRRfix4K_E8000

Table 30. Memory Map and MTRR Programming Example (Sheet 2 of 2)

Memory Range	Description	MTRR Setting	MTRR Encoding	MTRR Used for Configuration
F0000h – FFFFFh	64KB System Firmware	UC	00	MTRRfix4K_F0000 MTRRfix4K_F8000
1 MB – (2 GB-1 MB)	Extended Memory	WB	06	Variable MTRR
(2 GB-1 MB) – 2 GB	Extended Memory used as TSEG memory space	UC	00	Variable MTRR Note: The TSEG region will be declared as UC in this case.

Table 30 shows an example of the following configuration:

Sample Configuration:

- 2 GB of Main Memory populated in the system
- (2GB-1MB) - 2GB (1 MB of Main Memory being used as TSEG memory space) – Uncached. TSEG can be cached from within the SMM handler for the base SKU (non-secure) by using the MTRR/SMRR mechanism. The Quark SoC secure SKU always enforces uncached TSEG regardless of MTRR/SMRR setup.

Please refer to the *Intel® Architecture Software Developer's Manual* in Table 3 for the rules that apply to overlapping variable range MTRRs.

9.2 Processor Implications with Cached SMM Handler

Quark SoC secure SKU always enforces uncached TSEG regardless of MTRR/SMRR setup. This reduces the security threat to TSEG at the cost of system performance.The following sections on cached TSEG apply only to the Quark SoC base SKU (non-secure).

Some platforms run using a cacheable SMM handler. The Quark SoC supports one cacheable SMRAM area: TSEG. TSEG is located at the top of memory starting at (Top of physical memory - TSEG Size).

Top of Memory SMRAM (TSEG) can be used with a write-back (WB) cache policy. However, the specification requires that the TSEG SMRAM space be cached only inside the SMI handler.

9.2.1 System Management Mode Range Register

The System Management Mode Range Register (SMRR) is an enhancement to the Intel® 64 and IA-32 Architectures.

During the SMM relocation phase of the boot, UEFI firmware must detect if the Quark SoC supports SMRRs by examining the SMRR Support bit (IA32_MTRRCAP[11]). If the SMRR Support bit is set to '1', the Quark SoC supports the SMRR. If the SMRR Support bit is cleared to '0', then the Quark SoC does not support the SMRR.

9.2.1.1 UEFI Firmware Steps to Enable and Configure SMRR

Configuring the SMRR registers only occurs during the first SMI where SMM relocation of the SMBASE is accomplished. This sequence of steps is NOT executed with each subsequent SMI.

1. The BSP copies the SMI handler to TSEG
2. For the BSP and each AP the SMM Relocation Handler is responsible for:

— Setting a new SMBASE equal to the TSEG + a unique entry offset.

— Read the IA32_MTRRCAP register and test bit 11 of the IA32_MTRRCAP register. If bit 11 is set to 1 then the SMRR is supported. If bit 11 is cleared to 0 the SMRR is not supported.

— Configure the SMRR_PHYSBASE using the same physical address as the beginning of the TSEG. Also UEFI firmware must set the cacheability type in SMRR_PHYSBASE[7:0] = 06h for Write-Back (WB).

— Configure the SMRR_PHYSMASK with the size of the SMRAM region in TSEG and set the valid bit (bit 11).

— Resume (RSM)

While executing in SMM, the memory type of SMRAM is described by the SMRR. When executing outside SMM, if a memory request is made to an address mapped by the SMRR, it will always default to a UC memory access.

To minimize the number of variable MTRRs required to map conventional + low memory, the SMRR may overlap MTRRs. In the case where the SMRR overlaps MTRRs a decode precedence is applied such that the memory type is always defaulted to the operation of the SMRR.

Figure 3. SMRR Mapping with a Typical Memory Layout

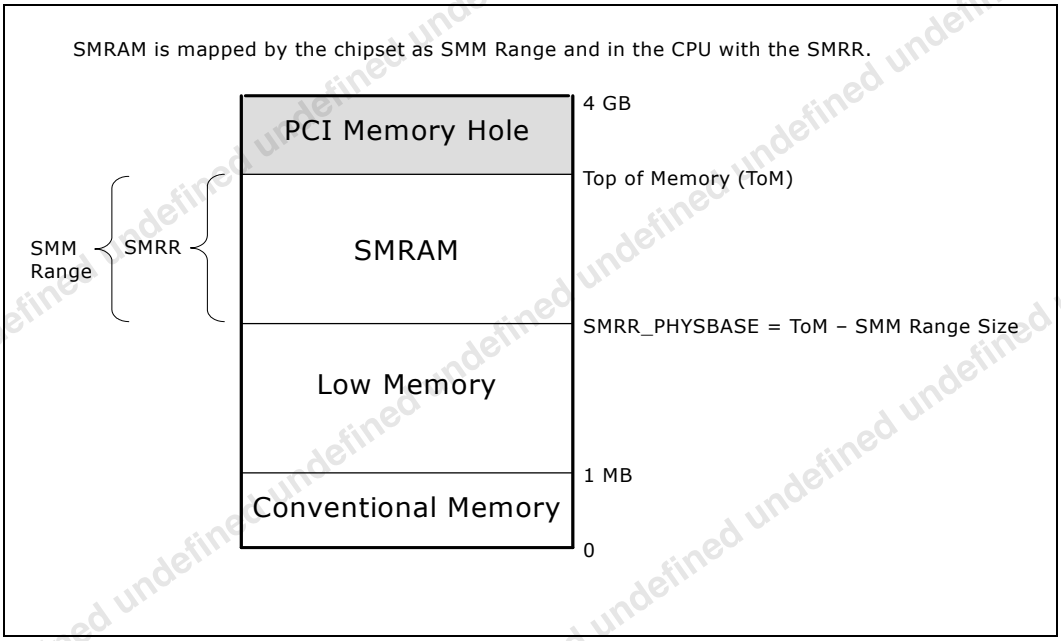

9.3 UEFI Firmware Sources

The following table lists the UEFI firmware sources related to the various sections in this chapter.

Section	Title	File Path	Function
9.1	MTRR Programming	QuarkSocPkg\Override\MdePkg\Library\BaseLib\\Ia32\ReadMsr64.c	AsmReadMsr64
		QuarkSocPkg\Override\MdePkg\Library\BaseLib\Ia32\WriteMsr64.c	AsmWriteMsr64
		QuarkSocPkg\Override\MdePkg\Library\BaseLib\Ia32\QuarkMsr.c	TranslateMsrIndex
		QuarkSocPkg\Override\UefiCpuPkg\Library\MtrrLib\MtrrLib.c	MtrrSetMemoryAttribute MtrrSetAllMtrrs
9.2	Processor Implications with Cached SMM Handler	IA32FamilyCpuBasePkg\PiSmmCpuDxeSmm\SmmFeatures.c	SmmInitiFeatures

§ §

10.0 Intel® Legacy SPI Controller

UEFI firmware resides on the SPI flash behind the legacy SPI Host Controller. UEFI firmware uses the Quark SoC legacy SPI Host Controller to perform various legacy SPI flash device operations (erase, program, protect). The SPI Host Interface registers used to achieve this are memory-mapped in the RCRB chipset register space with a base address (SPIBAR) of 3020h and are located within the range of 3020h to 308Fh. Refer to the Intel® Quark™ SoC X1000 Datasheet for the register list and definitions.

10.1 Legacy SPI Flash Decode Enable

Quark SoC Legacy Bridge (D31:F0) is configured by UEFI firmware to decode the addresses that target the legacy SPI flash. This is achieved by programming the 'BIOS Decode Enable' register (D31:F0:RD4h).

10.2 Legacy SPI Flash Base Address

UEFI firmware sets the 'Bottom Of System Flash' field in the 'BIOS Base Address' register (RCRB+3070h). Commands and memory reads whose address field is less than this value will be blocked from the legacy SPI flash.

EDKII does not program this register allowing the Quark SoC processor to read all Legacy SPI Flash locations.

10.3 Write Protecting SPI Flash Ranges

UEFI firmware is responsible for selecting the legacy SPI flash ranges that must be protected from malicious writes. This is achieved using the 'Protected BIOS Range' registers (RCRB+3080h to RCRB+3088h). UEFI firmware sets the 'Protected Range Base' and 'Protected Range Limit' fields to the range that must be protected and then sets the 'Write Protection Enable' bit.

10.4 Opcode/Opcode Type/Prefix Opcode Configuration

Opcodes required for SPI flash operations must be programmed by the UEFI firmware as part of the legacy SPI Host Controller initialization. This is achieved by programming registers RCRB+3074h to RCRB+3078h. UEFI firmware programs the required opcodes for the legacy SPI flash device(s) supported (refer to SPI flash manufacturers datasheet for the required opcodes).

10.5 Configuration Lockdown

UEFI firmware sets the 'Configuration Lock-Down' bit in the 'SPI Status' register (RCRB+3020h) to prevent alteration of the configuration performed in the previous sections. A reset is required to unlock.

10.6 Legacy SPI Flash Update Protection

UEFI firmware may prevent other system agents from updating the legacy SPI flash. It achieves this by configuring the Legacy Bridge to generate an SMI on any attempt to disable the legacy SPI flash Write Protection. The protection bit is not actually changed and the attempt to write to the bit will be trapped by UEFI firmware in the SMI handler, thus effectively keeping SPI writable for SMM IA firmware.

To enable this feature, UEFI firmware first clears the Write Protect Disable bit in the 'BIOS Control' register (D31:F0:RD8h Bit0=0). Finally, UEFI firmware sets the Lock Enable bit in the 'BIOS Control' register (D31:F0:RD8h Bit1=1). Once set, this bit can only be cleared by a reset.

The SMI Handler increments a runtime NVRAM UEFI variable each time it traps an SPI Access Violation. On the next boot, the firmware clears this access violation NVRAM UEFI count variable if it is not equal to zero. No security decisions are taken on the value of the count, but it is useful for bootloader and operating system integration testing.

10.7 UEFI Firmware Sources

The following table lists the UEFI firmware sources related to the various sections in this chapter.

Section	Title	File Path	Function
10.1	Legacy SPI Flash Decode Enable	QuarkPlatformPkg\Platform\Dxe\Setup\QNCRegTable.c	PlatformInitQNCRegs
10.2	Legacy SPI Flash Base Address	Not implemented (No current requirement to have an un-readable area of flash)	Not implemented
10.3	Write Protecting SPI Flash Ranges	QuarkPlatformPkg\Platform\DxeSmm\SMIFlashDxe\AccessViolationHandler.c	*.*
		QuarkNorthCluster\Library\IntelQNCLib\IntelQNCLib.c	QncEnableLegacyFlashAccessViolationSmi
10.4	Opcode/Opcode Type/ Prefix Opcode Configuration	QuarkPlatformPkg\Platform\SpiFvbServices\FwBlockService.c	FvbInitialize
10.5	Configuration Lockdown	QuarkPlatformPkg\Library\PlatformHelperLib\PlatformHelperDxe.c	PlatformFlashLockConfig
10.6	Legacy SPI Flash Update Protection	QuarkPlatformPkg\Library\PlatformHelperLib\PlatformHelperDxe.c	PlatformFlashLockPolicy
		QuarkPlatformPkg\Platform\DxeSmm\SMIFlashDxe\AccessViolationHandler.c	*.*

§ §

11.0 Reset Control

11.1 Reset Control Overview

The reset vector starts program execution at physical address FFFFFFF0h.

Hard resets are controlled by the Reset Control register (I/O Address CF9h) This range is always enabled.

Table 31. RESET CONTROL REGISTER (I/O ADDRESS CF9h)

Bit Range	Default & Access	Description
7:4	0b RO	RSV2 (RSV2): Reserved
3	0b RW	COLD_RST (COLD_RST): This bit causes SLPMODE, and RSTRDY# to be driven low, while SLPRDY# remains high. In response to this, the platform will perform a full power cycle
2	0b RO	RSV1 (RSV1): Reserved
1	0b W	WARM_RST (WARM_RST): This bit causes RSTRDY# to be driven low, with SLPMODE high, while SLPRDY# remains high. In response to this, the platform will pulse RESET# low to reset the CPU and all peripherals
0	0b RO	Reserved.

11.2 Cold and Warm Reset Control

A Cold reset results in all Quark SoC devices being reset and all registers including sticky registers being reset to their default power on settings.

A Warm reset results in all Quark SoC devices (with the exception of logic in power domains other than S0) being reset and all non-sticky registers being reset to their default power on settings. Thus S3/S5/RTC well logic will not get reset by a Warm reset.

11.3 UEFI Firmware Sources

The following table lists the UEFI firmware sources related to the various sections in this chapter.

Section	Title	File Path	Function
11.1	Reset Control Overview	QuarkPlatformPkg\Cpu\Sec\ResetVector\Ia32\ResetVec.asm16 QuarkPlatformPkg\Cpu\Sec\ResetVector\Ia32\ResetVec.S16 (For Secure SKU, reset vector is in the Rom code and not UEFI firmware)	ResetHandler
11.2	Cold and Warm Reset Control	QuarkSocPkg\QuarkNorthCluster\Library\ResetSystemLib\ResetSystemLib.c	ResetCold ResetWarm

§ §

12.0 PCI IRQ Routing

An OS may have the ability to dynamically route PCI interrupts to interrupt requests (IRQs). Usually in a traditional system BIOS a SETUP option is implemented to decide whether a PnP OS is going to be booted. Firmware must assign IRQs to all PCI devices during power-on self-test (POST) when the PnP OS Option is set to "Absent". Firmware must assign IRQs only for the boot devices, and not "all PCI devices" when a PnP OS that is IRQ routing capable is "PRESENT". These interrupts, once chosen, can be moved if the OS finds there is a conflict with the current usage of the interrupt.

To support assignment and reassignment of PCI IRQs, the OS will need to know how the system board has wired each motherboard integrated PCI device and each PCI slot's interrupt pins to the PCI Interrupt Router's interrupt pins. This chapter describes the capabilities of the Quark SoC that allow customization of such routings, and how firmware should report this platform-specific information to the OS.

12.1 PCI Interrupt to IRQ Router

There are 8 PIRQ pins supported named PIRQ[A#:H#], that route PCI interrupts to IRQs of the 8259 PIC. PIRQ[A#:H#] routing is controlled by PIRQ Routing Registers 60h-67h (D31:F0:R60h-R67h). See Figure 4 for details.

The PIRQs are connected to 8 individual IOxAPIC input pins, as shown in Table 32.

Table 32. PIRQ Routing Table

PIRQ# Pin	Interrupt Router Register	Connected to IOxAPIC Pin
PIRQA#	D31:F0:R60h	INTIN16
PIRQB#	D31:F0:R61h	INTIN17
PIRQC#	D31:F0:R62h	INTIN18
PIRQD#	D31:F0:R63h	INTIN19
PIRQE#	D31:F0:R64h	INTIN20
PIRQF#	D31:F0:R65h	INTIN21
PIRQG#	D31:F0:R66h	INTIN22
PIRQH#	D31:F0:R67h	INTIN23

Figure 4. PIRQ to IRQ Router

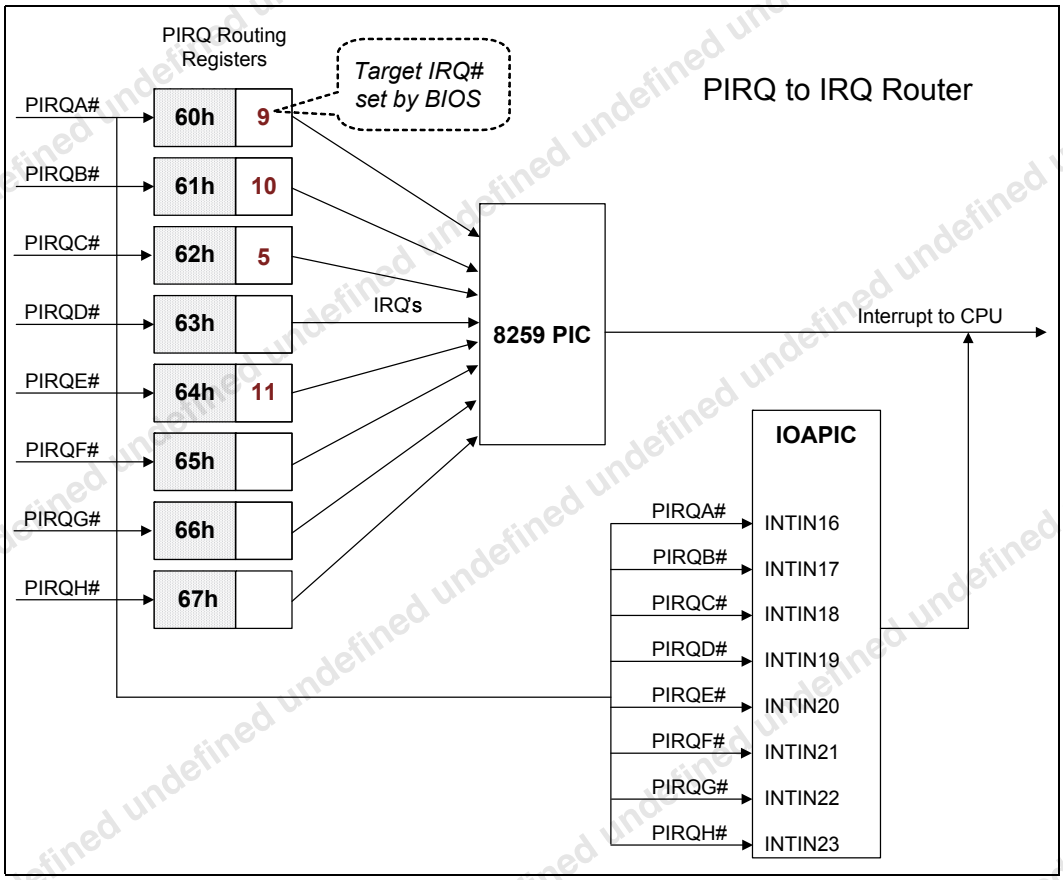

12.2 Interrupt Routing for Internal Agents

The Quark SoC provides maximum flexibility of interrupt routing for internal agents by allowing platform firmware to configure which PIRQy# line each INTx# pin drives. This allows the platform design to reduce the possibility of interrupt sharing among these agents. Figure 5 shows a logical illustration of this programmable interrupt routing control. It should be noted that INTx pin, when used in the PCI Express* context, represents a virtual wire rather than a physical signal pin (PCI Express* delivers interrupts by in-band messages instead of side-band pins).

The descriptions of the interrupt routing control registers can be found in the Intel® Quark™ SoC X1000 Datasheet. Note that when a value is programmed into the relevant register field to select the INTx pin for a PCI function, the same value will be mirrored in the read-only Interrupt Pin register (offset 3Dh) in the standard PCI configuration space header of this function.

When using these registers to implement a PCI interrupt routing scheme, it is important to remember the following rules defined in the PCI Specification:

> "Any function on a multi-function device can be connected to any of the INTx# lines. The Interrupt Pin register defines which INTx# line the function uses to request an interrupt. If a device implements a single INTx# line, it is called INTA#; if it implements two lines, they are called INTA# and INTB#; and so forth. For a multi-function device, all functions may use the same INTx# line or each may have

its own (up to a maximum of four functions) or any combination thereof. A single function can never generate an interrupt request on more than one INTx# line."

The recommended guidelines for interrupt routing are:

1. For a single-function PCI device capable of generating interrupt, use INTA pin.
2. For a multi-function device, at least one of the interrupt-capable functions must use INTA pin.
3. Always include entry for INTA pin when reporting device interrupt routing information of a multi-function device to OS, even though the function using INTA pin may actually be "hidden" by the Function Disable register. (Example: PCI IRQ routing table for all internal PCI devices and PCI slots, MPS table, ACPI _PRT objects, etc).

Figure 5. PCI Interrupt Routing Control

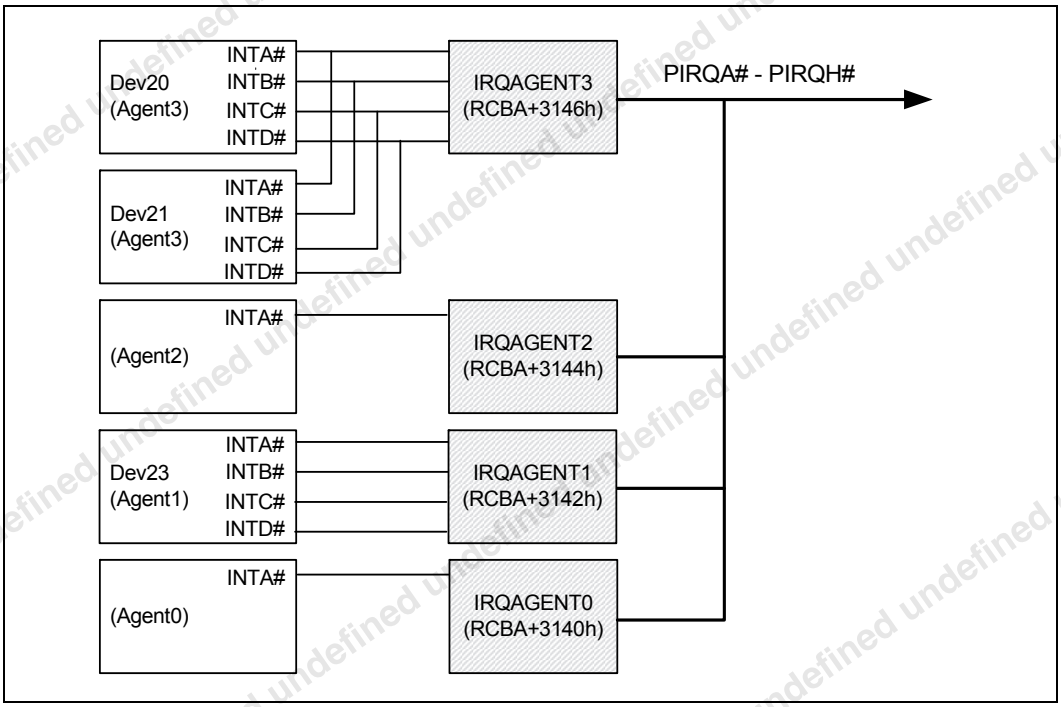

Agent0 - Quark SoC RMU (refer to Section 4.5)
Agent1 - PCIe Root Port Controller (refer to Figure 1)
Agent2 - Intel® Quark™ Core (refer to the *Intel® Quark™ SoC X1000 Datasheet*)
Agent3 - Quark SoC PCIe devices (refer to Figure 1)

A firmware developer may choose to change the default interrupt routing scheme to suit their platform configuration. However the default routing is expected to be efficient for most platforms, which are expected to be essentially closed systems. See the Interrupt Routing Configuration section of the Intel® Quark™ SoC X1000 Datasheet for details on the register programming required to change interrupt routing.

12.3 Interrupt Routing for PCI Express* Root Ports

The two PCI Express* root ports in the Quark SoC, represented as P2P bridges (D23:F0 and D23:F1), merit additional detail due to their complexities.

Interrupts generated by the root ports themselves (for example, PME or Hot Plug event interrupts) are governed by the same rules and configuration registers as those for all other internal PCI functions described above. On the other hand, the root ports perform the additional function of forwarding interrupts received from their secondary interfaces to the upstream root complex. In an effort of minimizing the possibility of interrupt sharing, a different interrupt mapping, or "swizzling", is defined for these root ports when forwarding interrupts upstream on behalf of downstream PCI Express* devices at their secondary interfaces, i.e., at the downstream end of the PCI Express* links. Table 33 defines this interrupt mapping for downstream devices.

Table 33. PCI Express* Root Port Interrupt Mapping for Downstream Devices

Port	INTA#	INTB#	INTC#	INTD#
0	INTA#	INTB#	INTC#	INTD#
1	INTB#	INTC#	INTD#	INTA#

The **INTx** in boldface on the top row in the table are interrupts received from the downstream devices (before the swizzling). The rest of the INTy in the table are interrupts forwarded upward by the root ports (after the swizzling). This swizzling is hard-wired, and is non-programmable by software. As an example, when a downstream device at root port 1 generates INTA#, then the root port will convert this INTA# into INTB# before forwarding it upstream.

Firmware is required to handle this swizzling and report this routing information to the OS in a manner similar to that of a PCI to PCI bridge. Table 34 is an example of PCI IRQ routing table entries for PCI Express* slots behind the root ports.

Table 34. PCI Express* Slot Interrupt Routing Table Example

Field Name	Size	Port 0	Port 1
PCI Bus Number	Byte	0	0
PCI Device Number (in upper five bits)	Byte	23	23
Link Value for INTA#	Byte	PIRQA	PIRQB
IRQ Bitmap for INTA#	Word	0E38h	0E38h
Link Value for INTB#	Byte	PIRQB	PIRQC
IRQ Bitmap for INTB#	Word	0E38h	0E38h
Link Value for INTC#	Byte	PIRQC	PIRQD
IRQ Bitmap for INTC#	Word	0E38h	0E38h
Link Value for INTD#	Byte	PIRQD	PIRQA
IRQ Bitmap for INTD#	Word	0E38h	0E38h
Slot Number	Byte	0	1

12.4 Reporting Interrupt Routing to the OS

The PCI interrupt routing schemes for all motherboard and chipset internal devices, PCI expansion slots and PCI Express* slots behind the root ports are platform specific information that needs to be reported to the OS by firmware via the following interfaces:

- ACPI _PRT packages
  ACPI Specification, in an ACPI environment
- ACPI Multiple APIC Description Table
  ACPI Specification, in an ACPI environment

Refer to the above specifications for detailed formats of interrupt routing tables and data structures.

12.4.1 Example PRT Packages for Interrupt Routing

The following is an ASL code example to illustrate interrupt routing on a Intel® Quark™ SoC-based platform, with _PRT packages for PIC mode only:

```
//-------------------------------------------------------------------------------
// INTERRUPT ROUTING _PRT EXAMPLE (PIC MODE)
//-------------------------------------------------------------------------------
Scope(\_SB) {

    Device(PCI0) { // PCI root bridge
        Name(_HID, EISAID("PNP0A03"))// PnP ID for PCI Bus
        Name(_ADR, 0x00000000)
        Name(_BBN, 0x0000) // Bus number, optional for the Root PCI Bus

        Name(_PRT, Package(){

                // Device 23 (PCI Express Root Ports)
                Package(){0x0017FFFF, 0, LNKE, 0 },
                Package(){0x0017FFFF, 0, LNKF, 0 },
                Package(){0x0017FFFF, 0, LNKG, 0 },
                Package(){0x0017FFFF, 0, LNKH, 0 },

        }) // end _PRT

        Device(PEX0) {
            Name(_ADR, 0x00170000)  // PCI Express Root Port0
            Name(_PRT, Package(){
                // PCI Express Slot1
                Package(){0x0000FFFF, 0, LNKE, 0 },
                Package(){0x0000FFFF, 1, LNKF, 0 },
                Package(){0x0000FFFF, 2, LNKG, 0 },
                Package(){0x0000FFFF, 3, LNKH, 0 },
            })
        } // end PEX0

        Device(PEX1) {
            Name(_ADR, 0x00170001)  // PCI Express Root Port1
            Name(_PRT, Package(){
                // PCI Express Slot
                Package(){0x0000FFFF, 0, LNKF, 0 },
                Package(){0x0000FFFF, 1, LNKG, 0 },
                Package(){0x0000FFFF, 2, LNKH, 0 },
                Package(){0x0000FFFF, 3, LNKE, 0 },
            })
        } // end PEX1

    } // end PCI0

} // end _SB scope
```

12.5 UEFI Firmware Sources

The following table lists the UEFI firmware sources related to the various sections in this chapter.

Section	Title	File Path	Function
12.1	PCI Interrupt to IRQ Router	QuarkPlatformPkg\Acpi\AcpiTables\Dsdt\\PciIrq.asi	*.*
12.2	Interrupt Routing for Internal Agents	QuarkPlatformPkg\Platform\Dxe\Setup\QNCRegTable.c	PlatformInitQNCRegs
12.3	Interrupt Routing for PCI Express* Root Ports	QuarkPlatformPkg\Acpi\AcpiTables\Dsdt\PciHostBridge.asi	Method(_PRT,0,NotSerialized)
		QuarkPlatformPkg\Acpi\AcpiTables\Dsdt\PciExpansionPrt.asi	Device (PEX0) Device (PEX1)
12.4	Reporting Interrupt Routing to the OS	QuarkPlatformPkg\Acpi\AcpiTables\Dsdt\PciHostBridge.asi	Method(_PRT,0,NotSerialized)
		QuarkPlatformPkg\Acpi\AcpiTables\Dsdt\PciExpansionPrt.asi	Device (PEX0) Device (PEX1)
		QuarkPlatformPkg\Acpi\Dxe\AcpiPlatform\MadtPlatform.c	*.*

§ §

13.0 PCI Express* Support

This chapter covers PCI Express* firmware support. The reader is expected to be familiar with PCI Express* Base Specification 2.0 and related terminologies (Endpoints, Root port, Isochrony, ASPM etc.).

The basic assumptions/requirements are:

1. Firmware is able to enumerate and configure all root ports as PCI-PCI bridges in compliance with PCI-to-PCI Bridge Architecture Specification, v1.2.
2. Firmware handles/reports the PCI interrupt routing schemes for the root ports and for the secondary buses behind them correctly (refer to Section 12.0 for more information).

13.1 PCI Express* Configuration Space Base Address

The PCI Express* specification defines a 256 MB block within the memory address space as PCI Express* configuration space addressable through a Bus:Device:Function mapping. The base address of this configuration space is determined by the value programmed in the "Extended Configuration Space" register. This value comes from the PCD `gEfiMdePkgTokenSpaceGuid.PcdPciExpressBaseAddress`.

Table 35. Op Codes 10h/11h, Msg Port 03h, Offset 09h: HECREG – Extended Configuration Space

Bit Range	Default & Access	Description
31:28	000b RW	**Extended Configuration Base Address (EC_BASE):** This field describes the upper 4-bits of the 32-bit address range used to access the memory-mapped configuration space. This field must not be set to 0xF
27:1	000000h RO	**Reserved (RSV11):** Reserved.
0	0b RW	**Extended Configuration Space Enable (EC_ENABLE):** When set, causes the EC_Base range to be compared to incoming memory accesses. If bits [31:28] of the memory access match the EC_Base value then a posted memory access is treated as a non-posted configuration access.

Once initialized and enabled by firmware, software can use memory instructions to access the PCI Express* configuration space registers by byte, word or dword, though the access may not cross dword boundaries.

To maintain the compatibility with PCI configuration space, the first 256 bytes (offset 00h through FFh) of the configuration space for a Bus:Device:Function can also be accessed via the I/O index/data register pair at CF8h/CFCh as defined in PCI 2.x specification.

In addition to programming and enabling the PCI Express* EC base address in the EC register (see Table 35), system firmware should program the identical value into Msg Port 00h, Offset 00h.

The Intel® Quark™ SoC addresses all 256MB starting at PCI Express* EC base address, but the amount of memory mapped space reserved is defined by the PCD `gEfiQuarkNcSocIdTokenSpaceGuid.PcdPciExpressSize`.

13.1.1 Releasing PCIe Controller from Reset

Quark SoC holds the PCIe controller in reset following a power on. UEFI firmware is responsible for releasing the PCIe controller from reset. The PCIe controller (D23:F0/F1) will not be visible in PCI configuration space while it is held in reset. The following table shows the sequence (in order) to release the PCIe controller from reset.

The PCIe signal PERST# supplied to the PCIe slots is accessed during this procedure. The CPU interface to the PERST# signal is platform dependent.

Table 36. PCIe Controller Reset Sequence

Step	Register setting	Description
1	ASSERT PERST#	PCI Express Reset, asserted low
2	Msg Port 31h:R36h Bit19=1	PHY common lane reset
	Delay (1 microsecond)	
3	Msg Port 31h:R36h Bit17/Bit20=1	PHY Sideband interface reset (bit 17) Controller main reset (bit 20)
4	Delay (80 microseconds)	Wait for PLL to lock
5	Msg Port 31h:R36h Bit18=1	Controller Sideband interface reset
	Delay (20 Microseconds)	
6	DE-ASSERT PERST#	
7	Msg Port 31h:R36h Bit16=1	Controller Primary interface reset

13.1.2 Bus:Device:Function:Register Offset Translation

The memory-mapped physical address of a given PCI Express* configuration register of a specific bus:device:function can be determined by:

PCI Express* Config Space Base Address + (Bus Number x 100000h) + (Device Number x 8000h) + (Function Number x 1000h) + Register Offset

13.1.3 Register Access Using Capabilities List

PCI Express* configuration registers are defined as a set of capability structures that are linked via Capabilities List pointers. It is recommended that firmware follows the pointers of the Capabilities List when accessing configuration registers of individual capability structures, so that the code will be reusable without change in the case where the offset of the capability structures are changed in future chipsets. Here are the guidelines of accessing standard PCI Express* configuration registers:

1. Locate the starting address of the configuration space section for a given Bus:Device:Function.
2. Locate the first Capabilities List pointer at offset 34h, or use offset 100h as the location of the first structure in PCI Express* extended configuration space, and follow the linked pointers until the desired capability structure is found by a matching Capability ID and thus the base address of the capability structure is determined.
3. Add the register offset into the capability structure to the base address found above to read/write the register.

Section 14.0 includes the sample code of register access using Capabilities List pointers.

13.1.4 Device/Port Type Field of PCI Express* Devices

PCI Express* Specification v2.0 states that extended configuration space capabilities may be implemented on a legacy endpoint, however, those capabilities may be ignored by software.

However, to ensure an important requirement by the same specification, that configuration of advanced features (for example, virtual channel, ASPM, etc) must be consistent between both ends of a PCI Express* link, Intel currently recommends that software should not differentiate PCI Express* Endpoint devices vs. legacy PCI Express* Endpoint devices when it performs configuration for a link.

Device/Port Type field can and should be checked/used when there is a need. (i.e. when software needs to access a register file that only applies to a root port but not to an endpoint device).

13.1.5 Initialize "Slot Implemented" for Root Ports

Firmware must initialize the "Slot Implemented" bit of the PCI Express* Capabilities Register at offset 02h in the PCI Express* Capability Structure of each available and enabled root port based on the platform implementation. Setting this bit to 1 will indicate that the PCI Express* link associated with this port is connected to a slot (as compared to being connected to an integrated device component or being disabled).

13.1.6 Initialize "Physical Slot Number" for Root Ports

Firmware must assign a unique number to the Physical Slot Number field of the Slot Capabilities register at offset 14h of the PCI Express* Capability structure of each available and enabled downstream root port that implements a slot. This number is not visible to existing legacy operating systems, but will be used by a PCI Express*-aware OS to identify the root port slots.

13.1.7 Initialize "Slot Power Limit" for Root Ports

Firmware must initialize the Slot Power Limit Value and Slot Power Limit Scale fields of the Slot Capabilities register structure of the root ports (D23:F0/F1:R54h[16:7]) so that cards or modules attached to the root ports will operate properly within the given limit of power consumption. This initialization should take place before the downstream device is enabled. Table 13 includes the recommended values for this register.

When either the Slot Power Limit Value or Slot Power Limit Scale field is written by software, the root port will send a Set_Slot_Power_Limit message to the downstream device, which will capture this information in the Captured Slot Power Limit Value and Captured Slot Power Limit Scale fields of its Device Capabilities register. This ensures that it does not exceed the imposed limit of slot power consumption.

The slot power consumption and allocation is platform specific. The guidelines are given in Table 37 based on the PCI Express* Card Electromechanical (CEM) Spec.

Table 37. Root Port Slot Power Consumption Guidelines

Form Factor / Slot Type	Link Width
	x1
CEM Standard	10W

13.1.8 Port Configuration Registers

There are several registers located in PCI configuration space for each root port that control the behavior and configuration of the port. The sub-sections in this chapter will refer to these registers for firmware programming information.

Table 38. D23:F0/F1:RD8h: MPC – Miscellaneous Port Configuration

Bits	Type	Reset	Definition
31	R/W	0	**Power Management SCI Enable (PMCE):** This enables SCI for power management events./
30	R/W	0	**Hot Plug SCI Enable (HPCE):** This enables SCI for hot plug events.
29	R/W	0	**Link Hold Off (LHO):** When set, the port will not take any TLP. It is used during loopback mode to fill the downstream queue.
28	R/W	0	**Address Translator Enable (ATE):** This enables address translation via AT during loopback mode.
27:21	RO	0	Reserved
20:18	R/W	100	**Unique Clock Exit Latency: (UCEL)** L0s Exit Latency when LCAP.CCC is cleared.
17:15	R/W	010	**Common Clock Exit Latency (CCEL):** L0s Exit Latency when LCAP.CCC is set.
14:12	RO	0	Reserved
11:08	R/W	0	**Address Translator (AT):** During loopback, these bits are XORd with bits [31:28] of the receive address when ATE is set.
07:02	RO	0	Reserved
01	R/W	0	**Hot Plug SMI Enable (HPME):** This enables the port to generate SMI for hot plug events.
00	R/W	0	**Power Management SMI Enable (PMME):** This enables the port to generate SMI for power management events.

Table 39. D23:F0/F1:RDCh: SMSCS – SMI / SCI Status (Sheet 1 of 2)

Bits	Type	Reset	Definition
31	R/WC	0	**Power Management SCI Status (PMCS):** This is set if the root port PME control logic needs to generate an interrupt and this interrupt has been routed to generate an SCI.
30	R/WC	0	**Hot Plug SCI Status (HPCS):** This is set if the hot plug controller needs to generate an interrupt and this interrupt has been routed to generate an SCI.
29:05	RO	0	Reserved
04	R/WC	0	**Hot Plug Link Active State Changed SMI Status (HPLAS):** This is set when SLSTS.LASC transitions from '0' to '1' and MPC.HPME is set. When set, SMI# is generated.

Table 39. D23:F0/F1:RDCh: SMSCS – SMI / SCI Status (Sheet 2 of 2)

Bits	Type	Reset	Definition
03:02	RO	0	Reserved
01	R/WC	0	**Hot Plug Presence Detect SMI Status (HPPDM):** This is set when SLSTS.PDC transitions from '0' to '1' and MPC.HPME is set. When set, SMI# is generated.
00	R/WC	0	**Power Management SMI Status (PMMS):** This is set when RSTS.PS transitions from '0' to '1' and MPC.PMME is set. When set, SMI# is generated.

13.1.9 SCI/SMI Generation

To support power management events on non-PCI Express* aware operating systems, PM events can be routed to generate SCI. To generate SCI, MPC.PMCE must be set. When set, a power management event will cause SMSCS.PMCS to be set.

Additionally, firmware workarounds for power management can be supported by setting MPC.PMME. When this bit is set, power management events will set SMSCS.PMMS, and SMI # will be generated. This bit will be set regardless of whether interrupts or SCI is enabled. The SMI# may occur concurrently with an interrupt or SCI.

13.2 RCRB (Root Complex Register Block)

As part of a PCI Express* Root Complex, the Quark SoC implements one RCRB which consists of a memory-mapped configuration register space region. This RCRB contains registers including PCI Express* extended capabilities and other implementation specific registers that apply to the Root Complex.

It should be noted that RCRB space is separate from the standard PCI Express* extended configuration space which employs a Bus:Device:Function number based indexing scheme.

It is assumed that the reader is familiar with PCI Express* specifications and related terminology (such as Root Complex, ASPM, Virtual Channel, etc).

13.3 Root Complex Topology Programming

The topology of PCI Express* Root Complex, i.e., the way Root Complex internal elements (RCRBs, root ports, internal devices) are inter-connected, is specific to each chipset implementation. Each element can be identified by a Component ID and a Port Number.

For PCI Express*-aware software (OS/Driver) to discover and comprehend this topology, Root Complex Topology Capability Structure registers in the configuration space are used. Most of these register fields are Read-Only and are automatically set up by the hardware. However, some fields must be programmed by firmware to complete the topology information. As a reminder, these fields are write-once-read-only, and should be programmed on both cold boot and S3 resume paths.

It should be noted that if the topology is changed, the Link Valid field (Read-Only) for the affected link(s) will return a value of 0 to indicate that the link is invalid (not present).

Recommended values for the root complex topology configuration are specified in Table 13.

13.4 PCI Express* Active State Power Management (ASPM)

The PCI Express* root ports in the Quark SoC support the L0s and L1 power management states. This section describes how firmware should enable L0s and L1 entry for an Endpoint attached to a root port.

13.4.1 Root Port L0s Exit Latency Initialization by Firmware

The Quark SoC allows firmware to program the L0s exit latency value which will be reported to software via the Link Capabilities register of each root port. The "Unique Clock Exit Latency" and "Common Clock Exit Latency" fields of the Misc Port Configuration register (D23:F0/F1:RD8h) of a root port, once programmed by firmware, will be "mirrored" in the EL0 field of Link Capabilities register of the port based on the value of the Common Clock Configuration bit in that register, and later used by firmware or OS/driver software in the calculation of total exit latency for an Endpoint.

It is recommended that firmware keep the default L0s exit latency values unless required to change them by future versions of this document or its updates.

13.4.2 Calculation of Total L-State Exit Latency

Prior to enabling L-state entry, firmware must calculate the total exit latency along the entire path to make sure that the total exit latency is within the tolerance of the Endpoint device in order to ensure the functionality and performance of the device. The exit latency of a path is the maximum of the exit latencies of the links along the path. For example: An endpoint is connected to a root port. The exit latency of the endpoint is 4-8 µs, while the exit latency of the root port is 2-4 µs. The exit latency of the path is 4-8 µs (use 8 µs to be safe), as the endpoint has longer exit latency than the root port.

Figure 6. ASPM Calculation Diagram

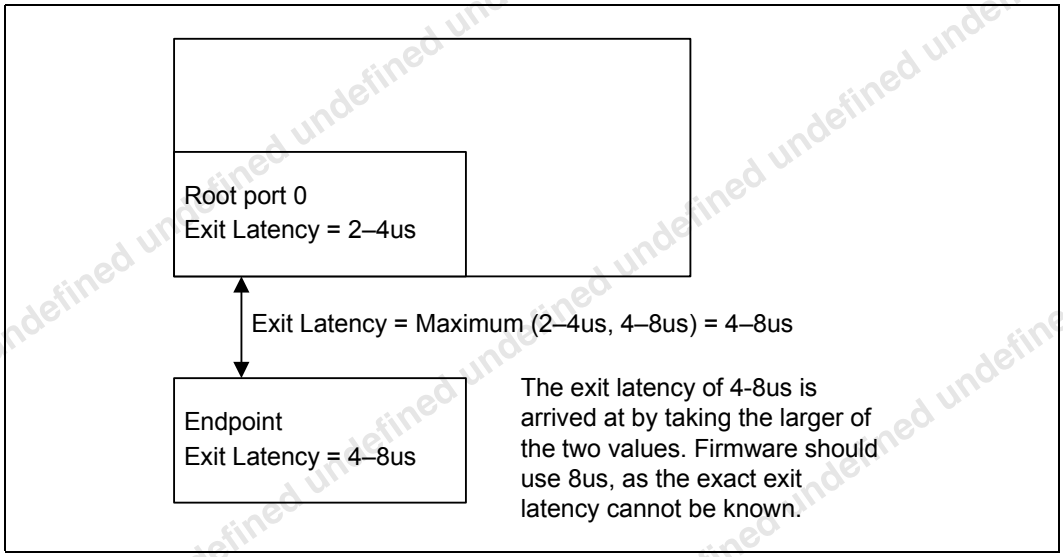

13.4.3 Firmware Software Flow for Enabling ASPM

Active state power management can only be enabled on an endpoint link if the exit latency of the link is less than the acceptable exit latency of the endpoint. So, if ASPM is to be enabled for an endpoint connected directly to a root port, the exit latency of the endpoint/root port link (the larger exit latency of the two) must be less than the acceptable exit latency of the endpoint. Firmware can obtain the exit latencies by reading bits 14:12 (L0s) and 17:15 (L1) of the Link Capabilities register in the PCI Express* Capabilities structure. The acceptable exit latencies can be obtained by reading 8:6 (L0s) and 11:9 (L1) of the Device Capabilities register in the PCI Express* Capabilities structure. Please see the PCI Express* specification for details on these registers.

13.4.4 ASPM vs. Isochrony

If isochronous service is enabled for a device, then the ASPM enabling for links along the isoch path becomes dependent on the isoch device involved. In general, this is a device specific topic, i.e. the software agent enabling isoch should comprehend the isoch latency requirements for the specific device. If the OS enables isoch, then it negotiates that with the driver. If firmware enables isoch, then firmware has to ensure that the path to the device is configured correctly. That is why isoch can only be enabled in firmware for a ***known*** device.

13.5 Root Port Error Reporting

The PCI Express* specification defined "Advanced Error Reporting" is not supported by the Quark SoC.

13.5.1 SERR# Generation

SERR# may be generated via two paths – through PCI mechanisms involving bits in the PCI header, or through PCI Express* mechanisms involving bits in the AER-alike structure. These errors are put together to signal SERR# to the platform. The PCI Express* methods for calculating SERR# do not set PSTS.SSE.

For the PCI Express*-based SERRs, the corresponding error enable bits in the AER-alike structure registers for Correctable Error, Uncorrectable-Fatal Error and Uncorrectable-Non-Fatal Error are all disabled by default after reset, so such errors will not be able to generate SERR#. To enable SERR# generation by such errors at root ports, software must program the following registers to enable individual errors:

- Device Control register of the root port PCI Express* Capability structure (D23:F0/F1, Reg 48h[2:0]).
- Root Control register of the root port PCI Express* Capability structure (D23:F0/F1, Reg 5Ch[2:0]).

Refer to PCI Express* Spec 1.0a, Section 6.2.5 for this multi-level control of PCI Express* error signaling.

13.6 PCI Firmware Spec 3.0 Support

PCI Firmware Specification v3.0 expanded the previous version of the spec to include support for the PCI Express* enhanced configuration mechanism, among other things. Firmware must be compliant with this spec in order to support PCI Express*-aware operating systems and PCI Express*-aware option ROMs.

Please refer to the latest specification at PCI SIG's website at www.pcisig.org.

13.7 ACPI Table and Methods for PCI Express* Support

13.7.1 MCFG Table

MCFG is an ACPI table that is used by platform firmware to communicate the enhanced configuration space mechanism's memory mapped base address for a PCI Express* platform. The format of MCFG table is shown in Table 40 and the format of the Configuration Space Base Address Allocation Structure is shown in Table 41. Note that since the system only contains a single PCI (default) segment, Segment 0 definition is implied and no additional _SEG objects are required.

The PCI Segment field denotes the PCI/PCI-X*/PCI Express* Segment field corresponding to the base address field in the hierarchy.

The 64-bit base address field provides the physical base address of the memory-mapped configuration space associated with the PCI Segment. It is the responsibility of the provider of the table to ensure that the base address reported is consistent with the requirements for the hardware implementation. Utilizing the enhanced configuration access method, the Base Address is aligned on 256 MB boundary with bits 27:0 being '0's.

The Start Bus Number and the End Bus Number fields define the range of buses that can be addressed by the region defined by the Base Address field via the Enhanced Configuration Access mechanism.

- The Start Bus Number field MUST be set to 0, but the End Bus Number must be determined by the PCD gEfiQuarkNcSocIdTokenSpaceGuid.PcdPciExpressSize.
- The End Bus Number field MUST be ((gEfiQuarkNcSocIdTokenSpaceGuid.PcdPciExpressSize / SIZE_1MB) - 1).

The memory region referenced by the PCIEXBAR register must use a non-conflicting address range.

The address range referenced by the MCFG table must be reserved and reported by firmware as follows:

- A PnP DevNode with Device ID = "PNP0C02" (motherboard resources). This reserved memory region will then be understood by a non-ACPI OS.
- A _CRS resource descriptor in the scope of a device with _HID = "PNP0C02" and immediately under _SB scope in ACPI namespace. For example:

```
Device (\_SB.EXPL)
{
    Name (_HID, EISAID("PNP0C02"))
                                        //motherboard resources
    Method (_CRS ,0)
    {
        // Return the resource descriptor for the
        // memory region referred to by MCFG table
    }
}
```

The memory region(s) referenced by the MCFG table must **not** be reported via the E820h table.

The memory region referenced by the EC register must use a non-conflicting address range. The address range must be reserved and reported using the ACPI _CRS objects.

The table signature 'MCFG' is a reserved keyword. Based on the signature and table revision, the OS can then interpret the implementation-specific data within the table. The Table Revision for revision 1.0 of the MCFG table is set to 1.

This table must not include the memory mapped configuration base addresses for hot pluggable PCI segments. Such segments must be described by using the MCBA method in the corresponding ACPI name space object.

Table 40. MCFG Table Layout

Field	Byte Length	Byte Offset	Description	Values
Header				
Signature	4	0	'MCFG'. Signature for the Memory mapped configuration space base address Description Table.	'MCFG'
Length	4	4	Length, in bytes, of the entire MCFG Description table including the memory mapped configuration space base address allocation structures.	60 (44 for table plus 16 for the single entry)
Revision	1	8	1	1
Checksum	1	9	Entire table must sum to zero.	0
OEM ID	6	10	OEM ID.	<OEM ID>
OEM Table ID	8	16	For the MCFG Description Table, the table ID is the manufacture model ID.	<manufacturer model ID>
OEM Revision	4	24	OEM revision of MCFG table for supplied OEM Table ID.	<OEM revision ID for this table>
Creator ID	4	28	Vendor ID of utility that created the table.	<vendor ID of the utility that created the table>
Creator Revision	4	32	Revision of utility that created the table.	
Reserved	8	36	Reserved.	
Configuration space base address allocation structure [n]	---	44	A list of the Memory mapped configuration base address allocation structures. This list will contain one entry corresponding to each PCI segment present in the platform.	

Table 41. Configuration Space Base Address Allocation Structure

Field	Byte Length	Byte Offset	Description
Base Address	8	0	Base Address for the Enhanced Configuration Access Mechanism
PCI Segment Group Number	2	8	PCI Segment Group Number. Default is 0. For all other PCI Segment Groups, this field value should correspond to the value returned by _SEG object in ACPI name space for the applicable host bridge device.
Start Bus Number	1	10	Start PCI Bus number corresponding to base address specified in the structure.
End Bus Number	1	11	End PCI Bus number corresponding to the base address specified in the structure.
Reserved	4	12	Reserved

Notes regarding Table 41:

- The PCI Segment field denotes the PCI/PCI-X*/PCI Express* Segment field corresponding to the base address field in the hierarchy. Since the system only contains a single (default) segment, namely, segment 0, no corresponding _SEG object is required.

- The base address field provides the 64-bit physical base address of the memory-mapped configuration space associated with the PCI Segment. It is the responsibility of the provider of the table to ensure that the base address reported is consistent with the requirements for the hardware implementation. Utilizing the enhanced configuration access method, the Base Address is aligned on 256 MB boundary with bits 27:0 being '0's.
- The Start Bus Number and the End Bus Number fields define the range of buses that can be addressed by the region defined by the Base Address field via the Enhanced Configuration Access mechanism. The Start Bus Number field MUST be set to 0, but the End Bus Number must be determined by the PCD gEfiQuarkNcSocIdTokenSpaceGuid.PcdPciExpressSize. End Bus Number field must be ((gEfiQuarkNcSocIdTokenSpaceGuid.PcdPciExpressSize / SIZE_1MB) - 1).

13.7.2 _HID and CID for PCI Host Bridge

Currently, Plug-and play ID (PNP ID) of PNP0A03 is used to indicate host-PCI bridge devices in ACPI name space. This PNP ID is used to describe both PCI/PCI-X* hierarchies.

A new PNP ID of PNP0A08 is defined to indicate PCI Express* as well as PCI-X* Mode2 host bridges to the operating system. The unique ID for these host bridges will allow the host to distinguish a PCI Express*, PCI-X* Mode2 hierarchy in a mixed host-bridge environment and also allow the OS to tune the driver loading process to the capabilities of the underlying I/O hierarchy.

To maintain compatibility with older operating systems that do not recognize the new PNP ID, when PNP0A08 is used to describe a device in the namespace, it is also required to include PNP0A03 as the compatible ID (_CID).

Here is an example ASL code with PNP0A08 usage:

```
Device(PCI0)                          // Root PCI Bus
    {
        Name(_HID, EISAID("PNP0A08")) // Indicates PCI Express host bridge
                                      // hierarchy
        Name(_CID, EISAID("PNP0A03")) // For legacy OS that doesn't understand
                                      // the new HID
        . . .
    }  // end PCI0 scope
```

13.7.3 _OSC() Method

Per the PCI Firmware Spec v3.0, the _OSC() ACPI control method is optional for Intel® Quark™ SoC-based platforms. It provides a two-way handshake mechanism for OS and firmware to advertise/exchange ACPI/PCI Express* support capabilities, so that smooth hand-over of control of certain capabilities can occur between firmware and OS.

The _OSC() method is located under devices whose capabilities can be supported either by firmware or by a PCI Express*-aware OS with built-in native support. For a PCI/PCI-X*/PCI Express* hierarchy, _OSC could be implemented under the host-bridge device or a P2P bridge device. For a PCI Express* hierarchy, _OSC method could be implemented under a host bridge device or a P2P bridge device corresponding to the root port. When present, _OSC is invoked by OSPM prior to evaluating any other object in the device's scope. This allows the return values from other objects to be predicated on the feature support / capability information conveyed by _OSC. OSPM may evaluate _OSC multiple times to indicate changes in OSPM capability, but this may be precluded by specific device requirements. _OSC enables the platform to configure its ACPI namespace representation and object evaluations to match the capabilities of OSPM.

This can allow legacy operating system support for platforms with new features that make use of namespace objects unknown to the legacy operating system. _OSC provides the capability to transition to native operating system support of new features and capabilities when available through dynamic namespace reconfiguration.

Firmware is allowed to return the capabilities bit(s) cleared when the Query Support flag is True, indicating that firmware is not ready to give up control of certain features. Firmware can also issue a **Notify** (device, 08h) to inform OSPM to re-evaluate _OSC when the availability of feature control changes.

In general, platforms should support both OSPM taking and relinquishing control of specific feature support via multiple invocations of _OSC but the required behavior may vary on a per device basis.

Arguments:

Arg0 (Buffer): UID
Arg1 (DWORD): Revision ID
Arg2 (BYTE): Query Support Flag
Arg3 (DWORD): Count
Arg4 (BUFFER): Capabilities DWORDs

UUID:

Universal Unique Identifier (16 Byte Buffer) defined as
33db4d5b-1ff7401c-96577441-c03dd766

Revision ID:

Capabilities DWORDs format revision. This revision is specific to the UUID.

Query Support Flag:

Uses Boolean logic. If True, the _OSC invocation is a query by OSPM and in this case for each bit set in Capabilities DWORDs, _OSC returns bits set for those capabilities for which OSPM may take control and bits cleared for those capabilities for which OSPM may not take control. If False, the _OSC invocation is not a query and any bits set in Capabilities DWORDs indicate capabilities for which OSPM will take control of once _OSC returns.

Count:

Number of capabilities DWORDs passed in Arg3

Capabilities DWORDs:

Buffer containing the number of DWORDs indicated by Count. The bits in each DWORD convey to the platform the capabilities and features supported by OSPM. Successive revisions of Capabilities DWORDs must be backwards compatible with earlier revisions. Bit ordering cannot be changed. Compatibility DWORDs are device specific and as such are described under specific device definitions. See ACPI Spec section 10, "ACPI-Specific Device Objects" for any _OSC definitions for ACPI devices. Capabilities DWORDs format and behavior rules may also be specified by OEMs and IHVs for custom devices and other interface or device governing bodies for example, the PCI SIG.

Table 42. Capabilities DWORD1 Definition

Bit	Description
0	0 = OS does not support PCI_Config Opregion > 100h 1 = OS supports PCI_Config Opregion > 100h
1	0 = OS does not support native PCI Express* hot plug 1 = OS supports native PCI Express* hot plug
2	0 = OS does not support SHPC hot plug 1 = OS supports SHPC hot plug
3	0 = OS does not support native PME 1 = OS supports native PME
4	0 = OS does not support native PCI Express* AER interrupt 1 = OS supports native PCI Express* AER interrupt
5	Reserved
6	0 = OS does not support ASPM 1 = OS Supports ASPM
31:7	Reserved

Result Code:

Capabilities DWORDs (Buffer) – The platform acknowledges the Capabilities DWORDs by returning a buffer of DWORDs of the same length. Set bits indicate acknowledgement and cleared bits indicate that the platform does not support the capability.

The basic scenario of using _OSC() is:

- Firmware provides _OSC() under a device in the ACPI name space as needed.
- OS detects the presence of _OSC() during ACPI initialization, and calls _OSC() with its current capabilities.
- Firmware examines the OS capabilities, and returns the capabilities (appropriately masked) indicating the capabilities that are handed over to exclusive OS control.

Below is an ASL code example of using _OSC() method:

```
Scope(\_SB)
{
    Method (_INI) {…}
    Device(PCI0) {              // PCI Root Bus
        Name(_ADR,0)
        Method (_OSC, 5)
        {
            Store (Arg3, Local0)              // Local0 = Cap. Dword count
            Multiply (Local0, 4, Local1)      // Local1 = Size of
                                              // buffer in bytes
            Name (BUF1, Buffer (Local1){})    // Create a buffer of
                                              // the right size
            Store (Arg4, BUF1)                // Copy input Arg4 into
                                              // local buffer
            Store (0, Local1)                 // Local1 = Cap. Dword #
                                              // (0,1,2…)
            Store (0, Local2)                 // Local2=ByteIndex into
                                              // Arg4 buffer (0,4,8,…)
            While (Local0)
            {
                Multiply  (Local1, 4, Local2) // Local2 = ByteIndex
                                              // into Arg4 buffer
                CreateDWordField (BUF1, Local2, CAPB)
                                              // CAPB is the next Dword
```

```
                    If (Arg2) // Query Flag = True
                    {
                        // Examine bits in CAPB and process it ...
                        If (LEqual(Local1, 0))     // If the 1st Cap
                                                   // Dword
                        {
                            And (CAPB, 0xfffffffc)
                                                   // Clear bits in Cap. DWORD as
                                                   // appropriate
                        }
                    }
                    Else //  Query Flag = False
                    {
                        // Examine bits in CAPB and process it
                    }
                    Increment (Local1)// Local1 = next DWord #
                    Decrement(Local0)// Update loop count
                }
                Return (BUF1)// Return the buffer of Cap DWORDs.
            } // end _OSC
        } // end PCI0
    } // end scope _SB
```

13.8 PCI Express* PME Firmware Support

PCI Express* delivers PME events by way of in-band Transaction Layer PME messages as opposed to the side-band signaling approach used by PCI bus. Additionally, the Root Complex can signal a PME event via an interrupt, allowing software to handle the PME as an interrupt event.

13.8.1 Native PME Software Model

PCI Express*-aware software can enable a mode where the Root Complex signals PME via an OS native interrupt. When configured for native PME support (which requires that legacy GPE-based PME support be disabled), a Root Port receives the PME Message and sets the PME Status bit in its Root Status register. If software has set the PME Interrupt Enable bit in the Root Control register to 1b, the Root Port then generates an interrupt. The software handler for this interrupt can determine which device sent the PME Message by reading the PME Requester ID field in the Root Status register in a Root Port. It dismisses the interrupt by writing a 1b to the PME Status bit in the Root Status register.

The native PME software model is expected to be used by future PCI Express*-aware OS-level software, therefore its implementation details are beyond the scope of this document.

13.8.2 Legacy PME Software Model

Legacy operating systems will not understand this in-band message-based, interrupt-driven mechanism for signaling PME. In the presence of legacy OS system software, the system power management logic in the Root Complex receives the PME Message and informs system software through an implementation specific mechanism.

The Quark SoC has included logic that allows software implementation of PCI Express* PME support using existing GPE-based ACPI model in a legacy OS environment.

13.8.3 Firmware Enabling of PCI Express* PME SCI Generation

The Quark SoC provides an option for software to route PCI Express* PME events to the ACPI General Purpose Event (GPE0) register for the purpose of generating SCI.

Firmware enables SCI generation by PCI Express* PME messages on the root port:

- Make sure that PME Interrupt Enable bit of Root Control register of PCI Express* Capability structure is cleared (=0b).
- Program Misc Port Config (MPC) register at PCI configuration space offset D8h as follows:
  - Power Management SCI Enable (PMCE, bit31) = 1b
  - Power Management SMI Enable (PMME, bit0) = 0b

  Note: For normal PME operation under ACPI OS, PME SMI should be disabled.
- Ensure GPE0 Register (GPE0BLK + 0h), BIT17(PCIE) is 0 (clear it if not zero).

13.8.4 Handling PCI Express* PME SCI Event

PCI Express* PME events can be handled using the existing GPE model defined by ACPI spec under ACPI OS environment, where firmware plays an important role.

13.8.4.1 General Mechanism and Sequence

The PCIE enable and status bits in the GPE0 registers map PCI Express* PME to an ACPI general purpose event which is signaled by an SCI. ACPI OS and system firmware can handle this event in a co-operative manner as shown in the following sequence. Note that this is an example to illustrate the main control flow. Although Implementations on different systems may vary and may involve more ACPI objects/ methods, the basic control flow described here will still apply.

- Firmware programs the chipset registers properly so that a PCI Express* PME event will cause the PCIE bits in GPE0 status register to be set to 1. See previous subsection for details.
- Firmware exposes _PRW object under the root port devices, indicating the wake capability of the device and the bit location of PCIE events in the GPE0 register. (A conceptual ACPI name space tree is shown in the example ASL code at the end of this chapter.)
- Firmware also provides a _GPE._L11 method in ASL code as the handler for these events.
- Based on its own power management policy and at a time of its own choosing, ACPI OS enables the PCIE enable bits in GPE0 register. It also programs the standard PCI PM register PMCS of each root port to enable PME generation by the port.
- When a PCI Express* PME event occurs at any one of the root ports or is received from downstream devices, the PCIE status bit(s) in GPE0 register will be set, causing a SCI being generated.
- ACPI OS clears PCIE enable bit(s) in GPE0 register, and then calls the _GPE._L11 control method provided by firmware which handles this event.
- ACPI OS clears the PME Status bit in the standard PCI PM register PMCSR of the port.
- ACPI OS clears PCIE status bit(s), and re-enables PCIE enable bit(s) in the GPE0 register.

13.8.4.2 Firmware GPE Handler for PME Event

Firmware needs to provide the _GPE._L11 control method in the ACPI name space as the actual handler for PCI Express* PME SCI event. Once invoked by ACPI OS, this control method should perform the following:

For each root port:

1. Read the Root Status Register (offset 20h of PCI Express* Capability structure) of the root port. If PME Status bit ==0, go to step 5.
2. Clear the PME Status bit by writing a 1b to it.
3. Check PME Status bit to see if it is set to 1 again (in case there was another PME event pending). If yes, go back to step 2.
4. Clear the PMCS status bit (offset DCh[31]) by writing a 1b to it.
5. Perform a "Notify(Device, 02)" to notify OS of the event that occurred at this particular root port location.
6. Go to the next root port and repeat steps 1 through 5, until all root ports are done.

13.8.5 Transition from Legacy to Native PME Software Model

As previously mentioned, a PCI Express*-aware OS will be able to handle PCI Express* PME events using the native, interrupt-driven PME software model. To enable such OS behavior, firmware must provide a proper _OSC control method in the ACPI name space for the transition from legacy to native PME software model.

The basic scenario of using _OSC() for native PME support transition is:

- Firmware provides _OSC() under a proper device in the ACPI name space. For the purpose of native PCI Express* PME support transition, the _OSC can be placed under the system bus scope, i.e., _SB._OSC().
- OS detects the presence of this _OSC() object during ACPI initialization, and calls the _OSC() with its current capabilities.
- In the _OSC() method, firmware ASL code does the following:

```
{
    Examine the input argument "OS capabilities";
    If ( "OS supports PCI Express Native PM" flag ==1 )
    {
        Clear the PMCE bit to 0b for all the root ports to route PMEs to native
        interrupt logic by programming D23:F0/F1:RD8h[31] =0b.
    }
    Return the Capabilities with "OS Supports PCI Express Native PME" flag
    unchanged, indicating that UEFI firmware is handing over PCI Express PME
support to
    exclusive OS control.
}
```

OS examines the value returned by _OSC() method and sees that "OS Supports PCI Express* Native PM" flag stays set; therefore it enables the native PME software model.

13.8.6 WAKE# Support

WAKE# is not supported at the PCIe controller level. Instead, PCIe devices wishing to wake the system must have their WAKE# signal routed to a wake event (see Section 17.5 for details).

Note: The PCIe bus power is not provided by Quark SoC during S3, so PCIe devices must have their own power source for their WAKE# signal.

13.9 UEFI Firmware Sources

The following table lists the UEFI firmware sources related to the various sections in this chapter.

Section	Title	File Path	Function
13.1	PCI Express* Configuration Space Base Address	QuarkPlatformPkg\Library\QuarkSecLib\Ia32\Flat32.asm QuarkPlatformPkg\Library\QuarkSecLib\Ia32\Flat32.S	stackless_EarlyPlatformInit
		QuarkSocPkg\QuarkNorthCluster\Library\IntelQNCLib\PciExpress.c	QNCRootPortInit PciExpressEarlyInit
		QuarkSocPkg\QuarkNorthCluster\Library\IntelQNCLib\IntelQNCLib.c	PeiQNCPostMemInit
13.1.1	Releasing PCIe Controller from Reset	QuarkPlatformPkg\Library\PlatformPcieHelperLib\PlatformPcieHelperLib.c	PlatformPciExpressEarlyInit
13.2	RCRB (Root Complex Register Block)	QuarkSocPkg\QuarkNorthCluster\Library\IntelQNCLib\IntelQNCLib.c	PeiQNCPreMemInit
13.3	Root Complex Topology Programming	QuarkSocPkg\QuarkNorthCluster\Library\IntelQNCLib\PciExpress.c	QNCRootPortInit
13.4	PCI Express* Active State Power Management (ASPM)	QuarkSocPkg\QuarkNorthCluster\Library\IntelQNCLib\PciExpress.c	PcieSetAspmAuto PcieSetAspmManual
13.5	Root Port Error Reporting	QuarkSocPkg\QuarkNorthCluster\Library\IntelQNCLib\PciExpress.c (Note: AER is not supported)	QNCRootPortInit
13.7	ACPI Table and Methods for PCI Express* Support	QuarkPlatformPkg\Acpi\AcpiTables\Mcfg\Mcfg.aslc	*.*
		QuarkPlatformPkg\Acpi\Dxe\AcpiPlatform\AcpiPlatform.c	AcpiUpdateTable
		QuarkPlatformPkg\Acpi\AcpiTables\Dsdt\Platform.asl	Device(PCI0)
13.8	PCI Express* PME Firmware Support	QuarkSocPkg\QuarkNorthCluster\Library\IntelQNCLib\PciExpress.c	QNCRootPortInit
		QuarkPlatformPkg\Acpi\AcpiTables\Dsdt\Platform.asl	Scope(_GPE)

§ §

14.0 Processor Interface

14.1 Front Side Bus Interrupt Delivery Mechanism

The Quark SoC supports the delivery of interrupts to the processor by using one of the two mechanisms:

1. Interrupt delivery by using the INTR/NMI pins on the processor, when the IOxAPIC is in Virtual Wire Mode A.
2. Interrupt delivery from the IOxAPIC by using the interrupt message delivery mechanism (MSI) when the IOxAPIC is enabled.

14.1.1 Configuration of the IOxAPIC

The only requirement for IOAPIC enabling is to build ACPI tables containing the appropriate IOAPIC entries.

14.1.2 Steps Involved in Delivering the Interrupt

The firmware boot process is as follows:

1. Firmware will configure the IOxAPIC for MSI delivery.
2. Firmware will build the ACPI APIC tables for the OS.
3. Control is passed to the boot strap loader to handle control to the OS.
4. OS will switch the interrupt operation from virtual wire mode to symmetric I/O Mode (IOAPIC usage).
5. When the OS switches the mode of interrupt delivery to the IOxAPIC the interrupts are delivered using the MSI mechanism.

These are the steps involved in the delivering of an MSI:

1. The Quark SoC detects that an interrupt event has happened and sets the IRR bit in the IOAPIC associated with that interrupt
2. The Quark SoC automatically flushes all the upstream buffers
3. The Quark SoC delivers the interrupt in the form of a 32-bit memory write cycle with a known format for address and data as defined in Table 43 and Table 44.
4. After this 32-bit memory write cycle is received, the write occurs to the Quark SoC.

Table 43. Interrupt Message Address Format

Bits	Description
Bits 31:20	FEEh
Bits 19:12 (Destination ID)	Same as bits 63:56 of I/O Redirection Table Entry
Bits 11:4 (Reserved)	00h
Bit 3 (Redirect Hint)	0/1
Bit2 (Destination Mode)	0/1 (based on bit 3)
Bits 1:0	00b

Table 44. Interrupt Message Data Format

Bits	Description
Bits 31:16	0000h
Bit 15 (Trigger Mode)	0/1 (Edge/Level)
Bit 14 (Delivery Status)	0/1 (De-assert / Assert)
Bits 13:11	00b
Bits 10:8 (Delivery Mode)	Same as 10:8 of I/O Redirection Table entry
Bits 7:0 (Vector)	

14.2 UEFI Firmware Sources

The following table lists the UEFI firmware sources related to the various sections in this chapter.

Section	Title	File Path	Function
14.1	Front Side Bus Interrupt Delivery Mechanism	IA32FamilyCpuBasePkg\CpuArchDxe\Cpu.c	CpuProgramVirtualWireMode
		QuarkPlatformPkg\Acpi\Dxe\AcpiPlatform\MadtPlatform.c	*.*

§ §

15.0 NMI Handling

15.1 Settings to Generate NMI

The Quark SoC can receive an NMI from the following sources:

1. SERR# assertion if configured in the NMI Status and Control Register (I/O port 61h).
2. Quark SoC Legacy Bridge (refer to the Intel® Quark™ SoC X1000 Datasheet for all possible sources of NMI in the Legacy Bridge).

The NMI Enable bit in the RTC index register (I/O port 70h, bit 7) can be used to mask the NMI signal and disable/enable all NMI sources. This is useful before an NMI handler has been installed.

NMI_EN – NMI Enable Register
I/O Address: 070h
Default Value: Bit[6:0]=undefined; Bit 7=1
Attribute: Write Only

This port is shared with the real-time clock. Do not modify the contents of this register without considering the effects on the state of the other bits.

Reading I/O Port 74h returns the value last written to the RTC index register (port 70h[6:0]). I/O Port 74h[7] always returns 0 when read.

Table 45. NMI_EN — NMI Enable Register (Shared with RTC Index Register) (I/O)

Bit	Description
7	NMI Enable. 1=Disable generation of NMI; 0=Enable generation of NMI.
6:0	Real Time Clock Address. Used by the Real Time Clock to address memory locations. Not used for NMI enabling/disabling.

15.2 Steps for Handling NMI

Firmware should execute the minimum steps described below for handling an NMI in Intel® Quark™ SoC-based systems.

15.2.1 Steps for Execution

1. Save the contents of I/O Register CF8h.
2. Save the current RTC Index by reading port 74h.
3. Disable the NMI generation by writing a “1” to bit 7 in port 70h.
4. Clear the PERR# and SERR# status bits in PCI Register Offset 06-07h for all PCI devices in the system supporting generation of their PERR# and/or SERR#.

5. Clear the Primary and Secondary PERR# and SERR# status bits in and all root ports (Device 23, Functions 0-1).
6. Clear the NMI source and perform any platform specific handling required:
   a. Clear SERR# status bit in port 61h.
   b. Clear NMI sources in Quark SoC Legacy Bridge (refer to the Intel® Quark™ SoC X1000 Datasheet).
7. Restore the RTC Index and NMI Disable bit in port 70h.
8. Restore the contents of I/O Register CF8h.
9. Exit from the NMI handler.

15.3 UEFI Firmware Sources

The following table lists the UEFI firmware sources related to the various sections in this chapter.

Section	Title	File Path	Function
15.1	Settings to Generate NMI	QuarkPlatformPkg\Library\QuarkSecLib\Ia32\Flat32.asm QuarkPlatformPkg\Library\QuarkSecLib\Ia32\Flat32.S	stackless_EarlyPlatformInit
		IA32FamilyCpuBasePkg\CpuArchDxe\IA32\Exception.c	mExceptionTable[]
15.2	Steps for Handling NMI	Not implemented (Common handler used for all exceptions: IA32FamilyCpuBasePkg\CpuArchDxe\IA32\Exception.c)	Not implemented (CommonExceptionHandler)

§ §

16.0 SMI Handling

The Quark SoC supports several sources of SMI. These include but are not limited to:

- Legacy GPIOs
- General Purpose Events (GPEs)
- Inter Processor Interrupts (IPIs)
- Power Management events

Refer to the Intel® Quark™ SoC X1000 Datasheet for a full list of all possible sources of SMIs. UEFI firmware must provide support for configuring and handling any source of SMI required (platform specific design).

16.1 SMI on Sleep Enable

The enable SMI on sleep bit (GPE0BASE + 10h[2]) allows firmware to enable generation of an SMI when the operating system writes to the SLP_EN. The SMI on sleep status bit (GPE0BASE + 14h[2]) reflects the source of the SMI as the Sleep SMI.

In the handler for this event, firmware typically initiates workarounds that must be in place before entry into a sleep state. Examples include saving platform specific registers that need to be restored after a WAKE, changing the state of a GPIO, etc.

16.2 Setting the EOS Bit

Setting the EOS bit (GPE0BASE + 14[31]) will de-assert the SMI# signal and will re-arm SMIs. If there is a pending and enabled SMI status bit, the EOS bit will read back as cleared. In this case, a SMI will occur as soon as the resume instruction is executed.

16.3 SMI Status Bits

The SMI status bits must be cleared by software after the SMI source has been de-asserted. It is up to the SMI handler to de-assert the SMI source and clear the status bits. Status bits that are set for SMI sources can be set even if they are not enabled and do not need to be serviced or cleared. SMI Status bits should be qualified with their respective enables before being serviced. If enabled status bits are not cleared, the EOS bit will remain set.

16.4 SMI Handler best practice

Given the secure SMM environment that SMI Handlers are executing in the handlers must follow the following best practices to mitigate attacks from compromised ring0-ring3 code.:

- Always validate pointers passed to SMI handlers so that the handler does not read or write from SMRAM. Pointers passed to SMI handlers should only ever reference memory outside SMRAM.
- Never call out to a functions outside SMRAM after the EndOfDxe EDKII event has been signalled.
- Always perform bound checking and integer overflow checking on any offset / size arguments passed to SMI handlers.

16.5 UEFI Firmware Sources

The following table lists the UEFI firmware sources related to the various sections in this chapter.

Section	Title	File Path	Function
16.1	SMI on Sleep Enable	QuarkPlatformPkg\Acpi\DxeSmm\AcpiSmm\AcpiSmmPlatform.c	RegisterToDispatchDriver
		QuarkSocPkg\QuarkNorthCluster\Smm\DxeSmm\QncSmmDispatcher\QNC\QNCSmmSx.c	QNCSmmSxGoToSleep
16.2	Setting the EOS Bit	QuarkSocPkg\QuarkNorthCluster\Library\QNCSmmLib\QNCSmmLib.c	InternalTriggerSmi ClearSmi
		QuarkSocPkg\QuarkNorthCluster\Smm\DxeSmm\QncSmmDispatcher\QNC\QNCSmmHelpers.c	QNCSmmSetAndCheckEos
		QuarkSocPkg\QuarkNorthCluster\Smm\Dxe\SmmControlDxe\SmmControlDriver.c	SmmClear
16.3	SMI Status Bits	QuarkSocPkg\QuarkNorthCluster\Library\QNCSmmLib\QNCSmmLib.c	InternalTriggerSmi ClearSmi
		QuarkSocPkg\QuarkNorthCluster\Library\IntelQNCLib\IntelQNCLib.c	QNCClearSmiAndWake
		QuarkSocPkg\QuarkNorthCluster\Smm\Dxe\SmmControlDxe\SmmControlDriver.c	SmmClear
		QuarkSocPkg\QuarkNorthCluster\Smm\DxeSmm\QncSmmDispatcher\QNCSmmHelpers.c	QNCSmmClearSource
16.4	SMI Handler best practice	QuarkPlatformPkg\Platform\DxeSmm\SMIFlashDxe\SMIFlashDxe.c	IsCapsuleInfoPacketValid IsAddressValid IsMfhOffsetValid

§ §

17.0 Power Management

17.1 Power Button Override

The power button override is handled by the Quark SoC.

Note: There is no status register to indicate this event.

17.2 Power Failure Considerations

Firmware can detect a power failure by reading the DRAMI bit (GPE0BASE + 2Ch[0]). This bit could be set by the memory initialization code and is only cleared on a system power failure. So, if the bit is set the system is in the process of warm booting. If clear, the system is recovering from a power failure.

17.3 Processor Throttling

Quark SoC does not support processor throttling. Only 100% duty cycle is supported. (P_BLK + 0h).

17.4 C States

The core provides support for C0, C1, and C2.

17.4.1 IRQ Break Events for C1 State

The C1 state is entered when the core executes a Halt (HLT) instruction.

IRQs are used as break events from a C1 state. If IRQs as break events must be disabled, firmware should do so using the 8259 mask registers prior to entering the C1 state. Firmware must also ensure that the mask register is enabled for the desired break events.

17.4.2 C2 State Support

C2 state support is available within the CPU. The C2 state is entered via reading the P_LVL2 register (P_BLK + 4h).

17.4.3 Cx State Support Reporting for ACPI OS

ACPI capable operating systems can support the C2 state by using the _CST control method implemented by system firmware. The example given below in Figure 7 assumes P_BLK address of 410h.

Figure 7. Cx State Support Reporting Through _CST Control Method

```
Processor (
    \_SB.CPU),        //Processor Name
    1,                //ACPI Processor number
    0x410,,           //PBlk system IO address
    6 )               //PBlkLen
    {
    Method (_CST, 0)
    {
        Return ( Package () {
            3,
            Package() {ResourceTemplate() {Register(FFixedHW, 0 0 0)}, 1,
    1, 1000},
            Package() {ResourceTemplate() {Register(SystemIO, 8, 0,
    0x414)}, 2, 1, 500},
        })
}
```

17.4.4 Break Events

Break events cause the Quark SoC to transition from C2 back to C0, following the entry steps in reverse order. The break events for exiting from C2 state are:

- Any unmasked interrupt going active
- Any internal event that causes an NMI or SMI#
- Any internal event that causes INIT# to go active
- A pending CPU break event, indicated by PBE#.

17.5 Wake Events

The following events are capable of generating a wakeup from S4/S5:

- POWER/RESET BUTTON:

  Note: There is no status register to indicate this wake event.

The following events are capable of generating a wakeup from a suspend state (S3):

- POWER/RESET BUTTON:

  Note: There is no status register to indicate this wake event and the ACPI power management bit (PM1_BLK + 00h[15]) interrogated by OS is not changed by hardware if POWER/RESET BUTTON event waked system during S3. This is a particular case were Intel® Quark™ SoC UEFI firmware will issue a cold reset as described in Section 18.3 step 2
- RTC ALARM: (RTC Enable at PM1BLK + 02h[10])
- PCI Express* Devices: (PCI Express* enable at GPE0BASE + 04h[17]). These are PCIe devices behind the PCIe Root Ports 0/1.
- Legacy (resume well) GPIO: (GPIO enable at GPE0BASE + 04h[14] to globally enable GPIO wake)
- External General Purpose Event: (EGPE enable at GPE0BASE + 04h[13] to globally enable EGPE wake)

UEFI firmware must configure/handle any of the above wake event required in the platform (platform design dependent). Refer to the Intel® Quark™ SoC X1000 Datasheet for details of the above registers.

17.6 UEFI Firmware Sources

The following table lists the UEFI firmware sources related to the various sections in this chapter.

Section	Title	File Path	Function
17.2	Power Failure Considerations	QuarkPlatformPkg\Platform\Pei\PlatformInit\MrcWrapper.c	MemoryInit
17.3	Processor Throttling	QuarkPlatformPkg\Acpi\AcpiTables\Cpu0Tst\Cpu0Tst.asl	*.*
17.4	C States	QuarkPlatformPkg\Acpi\AcpiTables\Cpu0Cst\Cpu0Cst.asl	*.*
17.5	Wake Events	QuarkPlatformPkg\Acpi\AcpiTables\Dsdt\Platform.asl	Scope(_GPE)
		QuarkSocPkg\QuarkNorthCluster\Library\IntelQNCLib\IntelQNCLib.c	QNCCheckS3AndClearState QNCCheckPowerOnResetAndClearState
		QuarkPlatformPkg\Acpi\DxeSmm\AcpiSmm\AcpiSmmPlatform.c	SxSleepEntryCallBack

§ §

18.0 Suspend Handler Considerations

18.1 Power-On Suspend Handling Preparation

Suspend handling preparation occurs during initial system boot (that is, for EDKII boot modes BOOT_WITH_FULL_CONFIGURATION and BOOT_WITH_MINIMAL_CONFIGURATION) and is performed by the AcpiSmmPlatform.efi driver, as well as miscellaneous chipset drivers using the S3BootScriptLib library to save register setting they wish to be restored during S3 Resume.

18.2 S3 Entry Steps

1. The ACPI operating system performs the steps "Transitioning from the Working to the Sleeping State" in the ACPI Specification (Table 3).
2. Step 1 above results in an SMI been generated and a generic QuarkSocPkg routine QNCSmmCoreDispatcher being entered.
3. QNCSmmCoreDispatcher determines a Sleep SMI has occurred and passes control to the registered platform sleep handler `SxSleepEntryCallBack`.
4. `SxSleepEntryCallBack` will:
   a. Will save current runtime state of specific chipset registers so that they can be restored on resume (`SaveRuntimeScriptTable`).
   b. Enable wake events, see Section 17.5.
   c. Assert PCI Express* signal PERST# to put PCIe cards into reset.
5. Control will return to QNCSmmCoreDispatcher which will Initiate Sleep States via SLP_EN Bit (`QNCSmmSxGoToSleep`, see Section 18.2.1).

18.2.1 Initiating Sleep States via SLP_EN Bit

Before the software sets SLP_EN bit in PM1_CNT register (PM1_BLK+04h[13]), interrupts must be masked and bus master activity must be disabled.

In an ACPI OS environment, the operating system is expected to ensure that this requirement is met.

If firmware sets the SLP_EN bit, it becomes the responsibility of firmware to ensure that the above requirement is met.

18.3 S3 Resume Steps

Firmware executes the following generic steps when resuming a system from S3 state (Suspend to RAM).

On a resume from S3 state the Quark SoC starts executing from the reset vector location of FFFF_FFF0h.

1. Re-program all chipset-specific base address registers, as described in Table 11 and Table 12.
2. Verify the system is waking (PM1_BLK + 00h[15]) and that the system is resuming from S3 state by looking at the SLP_TYP bit field (PM1_BLK + 04h[12:10]). If the system is not resuming from S3 state do not execute any of the steps below.

   Note: If SLP_TYP bit field (PM1_BLK + 04h[12:10]) has value for S3 state but hardware maintained (PM1_BLK + 00h[15]) bit interrogated by OS does not indicate a wake then Intel® Quark™ SoC UEFI firmware will issue a cold reset to follow a know good hardware/software reset path.
3. The system firmware will execute the steps for getting the memory functional in the platform and continue with the rest of the steps required for a system-wide resume.
4. Restore the Quark SoC configuration:
   a. Any SOC configuration perform by Intel® Quark™ SoC PEI stage drivers.
   b. Relocate the SMM base address to the SMM base that is being used in the system.
   c. Initialize the cache. This will involve the restore of the MTRR registers in the Quark SoC.
5. Restore Chipset registers saved using s3BootScriptLib and `SaveRuntimeScriptTable`.
6. If the system is resuming back to an ACPI OS the control can be passed to the ACPI OS waking vector at this step. An ACPI OS may reassign the PCI registers to some other value than what the firmware assigned in step 5. Step 5 is required as a safety step where the PCI devices have a default Base address register value assigned if a problem arises.

18.4 UEFI Firmware Sources

The following table lists the UEFI firmware sources related to the various sections in this chapter.

Section	Title	File Path	Function
18.1	Power-On Suspend Handling Preparation	QuarkPlatformPkg\Acpi\DxeSmm\AcpiSmm\AcpiSmmPlatform.c	InitAcpiSmmPlatform
		QuarkSocPkg\QuarkNorthCluster\Smm\DxeSmm\QncSmmDispatcher\QNCSmmCore.c	QNCSmmCoreRegister
		QuarkPlatformPkg**	(Drivers using S3BootScriptLib)
		QuarkSocPkg*.*	
18.2	S3 Entry Steps	QuarkSocPkg\QuarkNorthCluster\Smm\DxeSmm\QncSmmDispatcher\QNC\QNCSmmSx.c	QNCSmmSxGoToSleep
		QuarkSocPkg\QuarkNorthCluster\Smm\DxeSmm\QncSmmDispatcher\QNCSmmCore.c	QNCSmmCoreDispatcher
		QuarkPlatformPkg\Acpi\DxeSmm\AcpiSmm\AcpiSmmPlatform.c	SxSleepEntryCallBack SaveRuntimeScriptTable
18.3 S3 Resume Steps		QuarkSocPkg\QuarkNorthCluster\Library\IntelQNCLib\IntelQNCLib.c	QNCCheckS3AndClearState
		QuarkPlatformPkg\Override\UefiCpuPkg\Universal\Acpi\S3Resume2Pei\S3Resume.c	S3RestoreConfig2
		QuarkPlatformPkg\Platform\Pei\PlatformInit\MrcWrapper.c	InstallS3Memory
		QuarkSocPkg\QuarkNorthCluster\MemoryInit\Pei*.*	*.* (when MRC_PARAMS.boot_mode = bmS3)
		QuarkPlatformPkg\Platform\Pei\PlatformInit	*.*

§ §

19.0 High Performance Event Timer (HPET) Support

19.1 HPET Basic Configuration

The address of the HPET register block in the Quark SoC is always mapped to address FED00000h. No programming is required to enable decoding of this region. In all other respects, the operation and programming of the HPET is identical to previous platforms.

UEFI firmware is responsible for reporting the presence of the HPET and the resources it consumes to the OS via ACPI tables.

For additional details, refer to the Intel® Quark™ SoC X1000 Datasheet, in the Legacy Bridge HPET Registers section. Also refer to the ACPI specification for additional details on reporting the HPET to the OS.

19.2 UEFI Firmware Sources

The following table lists the UEFI firmware sources related to the various sections in this chapter.

Section	Title	File Path	Function
19.1	HPET Basic Configuration	QuarkPlatformPkg\Acpi\Dxe\AcpiPlatform\AcpiPlatform.c	AcpiUpdateTable AcpiPlatformEntryPoint
		QuarkPlatformPkg\Acpi\AcpiTables\Dsdt\LpcDev.asi	Device(HPET)
		QuarkPlatformPkg\Acpi\AcpiTables\Hpet\Hpet.aslc	*.*

§ §

20.0 GPIO Handling

20.1 Legacy GPIOs

The Quark SoC supports two core well legacy GPIOs and six resume well legacy GPIOs. Each GPIO is capable of input, output, SCI generation, SMI generation, and NMI generation. Also, when configured as inputs, each GPIO can generate an interrupt on the rising and/or the falling edge of the input signal. Resume well GPIOs are also capable of generating WAKE events (refer to Section 17.5).

20.1.1 Legacy GPIO Configuration

The offset and function of the GPIO registers is provided in Table 46. The GPIOs should be configured to match the associated functionality on the platform.

Note: Two core well and six resume well GPIOs are present in the legacy block. So only bits 1:0 are valid for the core well GPIO registers and 5:0 for resume well GPIO registers.

Note: The offsets given below are from the GPIO Base Address, as programmed in D31:F0:R44h. See Table 11, "Non-Standard IO Base Address Registers" on page 23 for details.

Note: Only Core Well GPIO configuration are reprogrammed on a resume from S3, Resume Well GPIOs registers are not written to on a resume from S3.

Table 46. GPIO Registers Offset and Function

Core Well GPIO Offset	Resume Well GPIO Offset	Function
0000h	0020h	Enable
0004h	0024h	I/O Select (0=Output, 1=Input)
0008h	0028h	Level
000Ch	002Ch	Positive Edge Trigger Enable
0010h	0030h	Negative Edge Trigger Enable
0014h	0034h	GPE Enable
0018h	0038h	SMI Enable
001Ch	003Ch	Trigger Status
0040h	0044h	NMI Enable

20.1.2 Legacy GPIO Interrupt Handling

If a GPIO is configured to generate an interrupt, in the GPIO interrupt handler software must:

1. Check the GPIO status bit in the GPE0 status register (GPE0_BLK base + 0h[14]) if in a GPE handler and the SMI status register (GPE0_BLK base + 14h[9]) if in the SMI handler.
2. If the GPIO status bit is set, software must determine which GPIO caused the interrupt by reading the core and resume well "Trigger Status" registers.
3. Handle any GPIOs whose associated status bits are set.
4. Clear the status bits in the "Trigger Status" register (GPIO Base + 1Ch/3Ch for core/resume well GPIOs).
5. Clear the GPIO GPE or SMI status bit in the GPE0_BLK (GPE0_BLK base + 0h[14] for a GPE or GPE0_BLK base + 14h[9] for an SMI).

20.2 Chipset South Cluster GPIO Controller

The Quark SoC supports 8 Independently configurable GPIOs, Separate data register and data direction for each GPIO, Interrupt source mode supported for each GPIO, De-bounce logic for interrupt sources and Metastability registers for GPIO read data

20.2.1 South Cluster GPIO Controller Configuration

The GPIO MMIO registers are shown in Table 47. The GPIOs should be configured to match the associated functionality on the platform.

Table 47. South Cluster GPIO Controller MMIO Registers

MMIO Address	Function
I2C/GPIO Controller [BAR1] + 00h[7:0] BAR1 Reference: [B:0, D:21, F:2] + 14h	GPIO Port A data bits (GPIO_SWPORTA_DR)
I2C/GPIO Controller [BAR1] + 04h[7:0] BAR1 Reference: [B:0, D:21, F:2] + 14h	GPIO Port A data direction bits (GPIO_SWPORTA_DDR)
I2C/GPIO Controller [BAR1] + 30h[7:0] BAR1 Reference: [B:0, D:21, F:2] + 14h	Interrupt Enable (GPIO_INTEN)
I2C/GPIO Controller [BAR1] + 34h[7:0] BAR1 Reference: [B:0, D:21, F:2] + 14h	Interrupt Mask (GPIO_INTMASK)
I2C/GPIO Controller [BAR1] + 38h[7:0] BAR1 Reference: [B:0, D:21, F:2] + 14h	Interrupt Type (GPIO_INTTYPE_LEVEL)
I2C/GPIO Controller [BAR1] + 3Ch[7:0] BAR1 Reference: [B:0, D:21, F:2] + 14h	Interrupt Polarity (GPIO_INT_POLARITY)
I2C/GPIO Controller [BAR1] + 48h[7:0] BAR1 Reference: [B:0, D:21, F:2] + 14h	Debounce Enable (GPIO_DEBOUNCE)
I2C/GPIO Controller [BAR1] + 60h[0] BAR1 Reference: [B:0, D:21, F:2] + 14h	Synchronization Level (GPIO_LS_SYNC)

20.3 UEFI Firmware Sources

The following table lists the UEFI firmware sources related to the various sections in this chapter.

Section	Title	File Path	Functions/Tables
20.1.1	Legacy GPIO Configuration	QuarkPlatformPkg\Platform\Pei\PlatformInit\PlatformEarlyInit.c	EarlyPlatformInit
		QuarkPlatformPkg\Include\PlatformBoards.h	PLATFORM_LEGACY_GPIO_TABLE_DEFINITION
20.1.2	Legacy GPIO Interrupt Handling	Not implemented (Intel® Quark™ SoC not supporting legacy GPIO interrupts in UEFI firmware)	Not implemented (Intel® Quark™ SoC not supporting legacy GPIO interrupts in UEFI firmware)
20.2.1	South Cluster GPIO Controller Configuration	QuarkPlatformPkg\Platform\Pei\PlatformInit\PlatformEarlyInit.c	EarlyPlatformInit
		QuarkPlatformPkg\Include\PlatformBoards.h	PLATFORM_GPIO_CONTROLLER_CONFIG_DEFINITION

§ §

21.0 Security Enhancements

21.1 Introduction

This chapter is dedicated to describing the enhancements made to the Intel® Quark™ SoC UEFI firmware to make it more robust and resistant to attacks and failures. These enhancements are designed to reduce the risk of a system becoming non-bootable or compromised.

21.1.1 Security Build Options

Some of the following sections have different levels of Security depending on the build options used to generate the firmware images. For details, see *Intel® Quark™ SoC X1000 Board Support Package (BSP) Build and Software User Guide*.

Security Build Options:

- NONE
  No security build options specified in EDKII build parameters
- -DSECURE_BOOT_ENABLE=TRUE
  Add UEFI Secure Boot support to firmware build. Same build option format for UEFI Secure Boot support on public UDK platform packages.
- -DSECURE_LD
  Secure Lockdown build option specified in EDKII build parameters.

  Note: On Intel® Quark™ SoC secure SKU parts even if Intel® Quark™ SoC UEFI firmware is not built with -DSECURE_LD build option the firmware will enforce -DSECURE_LD security policies.

21.2 Secure Boot

Secure Boot is split between Intel® Quark™ SoC ROM Root of trust Secure Boot which authenticates firmware volumes in system flash (or firmware update/recovery capsules) and UEFI Secure Boot which is an industry standard mechanism which authenticates UEFI executables external to system flash.

21.2.1 Intel® Quark™ SoC ROM Root of trust Secure Boot

For Intel® Quark™ SoC X1000 secure SKU, the hardware implements a root of trust that starts executing code from ROM at the reset vector (0xFFFFFFF0). This ROM code authenticates the Intel® Quark™ SoC UEFI firmware before passing control to it. The ROM code will not launch Intel® Quark™ SoC UEFI firmware if it fails authentication.

Intel® Quark™ SoC UEFI firmware is split into two firmware volumes:

- Stage1 Firmware Volume
- Stage2 Firmware Volume

The Stage1 Firmware Volume continues the chain of trust by first authenticating the Stage2 Firmware Volume (via a call to the ROM code to perform the authentication) before passing control to it. This chain of trust is continued all the way up to the OS. For a detailed description of the Intel® Quark™ SoC secure boot feature, see *Intel® Quark™ SoC X1000 Secure Boot Programmer's Reference Manual*.

There is a security key module stored in flash (refer to Intel® Quark™ SoC X1000 Secure Boot Programmer's Reference Manual). Intel® Quark™ SoC UEFI firmware always validates this key module before it validates Stage2 Firmware volumes and firmware update capsules (see Figure 8 and Section 22.8, "Write Capsule to Flash" on page 123). The firmware may or may not also validate the key module for other images (for example, bootloader payload). See the QuarkBootRomLib (Section 21.13) for details.

The authentication functions in QuarkBootRomLib will always return a positive result if the firmware is executing on base SKU hardware, also called non-secure SKU.

21.2.2 UEFI Secure Boot

See Security Build Options on how to add support for UEFI Secure Boot to the Intel® Quark™ SoC UEFI firmware build.

The following link is the landing page for the EDKII implementation of UEFI Secure Boot http://tianocore.sourceforge.net/wiki/SecurityPkg. The "How to Sign UEFI Drivers & Applications VX.YY.pdf" on this landing page gives a useful overview of UEFI Secure boot and also links to further reading.

Another useful slide presentation on UEFI Secure Boot is http://www.uefi.org/sites/default/files/resources/1_-_UEFI_Summit_Deploying_Secure_Boot_July_2012_0.pdf. The "Required for Secure Firmware Updates" requirement of this slide presentation is supplied by Section 21.2.1 in Intel® Quark™ SoC UEFI firmware.

It is beyond the scope of this document to explain industry standard UEFI Secure Boot, the reader should use the links above for a overview of UEFI Secure Boot. This document does outline adaptations to Intel® Quark™ SoC firmware to support UEFI Secure Boot.

To give the same level of protection as Intel® Quark™ SoC ROM Root of trust Secure Boot it is expected that the created UEFI Secure Boot private keys / public certificates are SHA256 based.

Intel® Quark™ SoC firmware adaptations for UEFI Secure Boot are in the areas of UEFI Secure Boot firmware deployment / recovery, maintaining UEFI Secure Boot variables during firmware update, updating UEFI Secure boot variables during firmware update and UEFI Secure Boot rollback protection. Intel only supports UEFI Secure Boot on secure SKU parts since the secure SKU ROM is required for authentication and rollback protection of signed firmware update/recovery capsules.

21.2.2.1 Intel® Quark™ SoC firmware UEFI Secure Boot support during firmware deployment and firmware recovery

Intel® Quark™ SoC firmware UEFI Secure Boot deployment was designed for an embedded system booting a single operating system, in other words the platform owner only trusts boot loaders signed by a specific operating system vendor (some of the links above envisage systems booting multiple boot loaders for different operating systems).

UEFI secure boot has a mechanism whereby a Physical Present user can place the system into custom mode and provision the UEFI Secure boot Authenticated Variables without the need to sign the Authenticated Variable payloads. Intel® Quark™ SoC

firmware simulates this mechanism on first boot of a Intel® Quark™ SoC embedded system after manufacture and recovery. EFI Secure boot custom mode is entered for short period of time on the first boot when an Intel® Quark™ SoC firmware call back is signalled that variable write services have been installed (by PI DXE stage2 firmware). The data to be provisioned on the first boot is programmed into the unsigned platform data area during manufacture or firmware recovery. On the first boot the signalled call back reads the provisioning items in platform data area (Table 23) and writes them to the UEFI Secure boot variables 'db', 'dbx', 'kek' and 'pk'. The provisioning items are then deleted from the platform data area when provisioning is complete and before any third party OPROMs or boot loaders have executed on the first boot.

Even though Intel® Quark™ SoC firmware does not guard against a physical attack (using flash programmer) on unsigned flash areas (eg MFH, platform data and NVRAM) it is recommended that the UEFI Secure Boot Quark embedded systems are booted once before shipment. In any case the platform data area used to provision UEFI Secure Boot is hardware write protected during PI DXE stage2 before any third party components can execute Section 21.4.2.

On first boot after recovery the provisioning data in platform data area was placed there by the recovery firmware after it had authenticated the signed capsules using the Intel® Quark™ SoC secure SKU ROM.

The firmware update capsule image in the recovery file (FVMAIN.fv Recovery Module File Contents) for Intel® Quark™ SoC UEFI Secure Boot systems must have a platform data area image containing all the platform data items that was used in production including the UEFI Secure Boot provisioning items (Table 23 on page 37). The capsule flags must indicate that no unit specific items are written to flash (e.g. PD_UPDATE_MAC in Section 22.2.1, "Intel® Quark™ SoC UEFI Firmware specific capsule flags" on page 121 must be clear).

21.2.2.2 Intel® Quark™ SoC firmware UEFI Secure Boot support during firmware update.

During firmware Update Intel® Quark™ SoC firmware can either provision the system for the first time if the firmware was built with UEFI Secure Boot support or replace the UEFI Secure Boot variables if the system is already provisioned. In both cases the provisioning data is taken from the platform data area in the signed firmware update capsule and is provisioned during Section 22.8, "Write Capsule to Flash" on page 123. Like the firmware recovery case (Section 21.2.2.1) the Intel® Quark™ SoC secure SKU ROM is used to authenticate the capsule.

Note: Quark systems cannot be changed after UEFI Secure boot has been provisioned from UEFI Secure Boot system to a non UEFI Secure boot system by a Firmware Update (a different GUID is used in the NVRAM header, gEfiAuthenticatedVariableGuid for EDKII UEFI Secure Boot systems or gEfiVariableGuid for EDKII built without UEFI Secure boot).

21.2.2.3 Intel® Quark™ SoC firmware UEFI Secure Boot rollback protection using secure SKU ROM.

UEFI Secure Boot variables can only be updated as shown in Section 21.2.2.2 This enables UEFI Secure Boot rollback protection to also protect if UEFI Secure Boot keys become compromised. For example if keys becomes compromised then a new recovery file is built. The firmware update capsule in the new recovery file must have a higher SVN then the SVN in the original firmware update capsule. A firmware update should be preformed on systems in the field using the firmware update capsule image in the new recovery file (FVMAIN.fv Recovery Module File Contents). This will insure that in field systems are using the new certificates and can only be recovered with the new recovery file (with the higher SVN).

If the UEFI Secure boot certificates are the only component that has changed a firmware update capsule just containing a platform data area image may also be built at the same time as the new recovery file but both capsules should use the new SVN.

The mechanism mandates Intel® Quark™ SoC firmware does not allow UEFI Secure Boot variables to be updated at run time using the UEFI SetVariable run time service. This is not expected to be an issue for Quark embedded systems (in many cases headless systems) running a single embedded OS. In any case OS owners are already expected to give UEFI Secure boot public certificate to the platform owners so that the manufacturing flash binaries can be created (and flash recovery files can be created / signed).

21.3 Isolated Memory Regions (IMRs)

Intel® Quark™ SoC hardware provides the capability to configure IMRs to allow/deny access by certain system agents to programmed memory ranges. Thus, an area of memory that is only for use by the host processor can be protected from other DMA agents in the system. Intel® Quark™ SoC UEFI firmware when running on secure SKU Intel® Quark™ SoC parts or when built with -DSECURE_LD build option (see *Intel® Quark™ SoC X1000 Board Support Package (BSP) Build and Software User Guide*), uses IMRs to protect the following sensitive assets during boot:

- PeiMemory: Memory used for Intel® Quark™ SoC UEFI firmware code/data, boottime services code/data, stack, OS loader
- ACPI Memory: Memory that holds ACPI reclaim, runtime services code/data, reserved memory, ACPI NVS memory
- RMU Memory: RMU binary in memory
- Legacy S3 Memory: Region of memory below 1MB that hold legacy S3 code
- AP Startup Vector Memory: Region of memory that is used for startup code for multi-processor capable systems
- Default SMRAM Memory: Region of memory that SMRAM is mapped to following a processor reset (typically used to relocate the SMBASE to TSEG).
- eSRAM Memory: Memory that the initial Stage1 Firmware Volume is copied into (from legacy SPI flash) following a system reset.

The following table shows when IMRs for the above memory regions must be set up by Intel® Quark™ SoC UEFI firmware and if they are locked UEFI firmware or torn down by UEFI firmware (or subsequent system components):-

Table 48. Create/Destroy/Lock Requirements for IMRs (Sheet 1 of 2)

Memory Region	IMR Create	IMR Destroy	IMR Lock
eSRAM	Reset Vector code	Stage2 Firmware Volume	No
PeiMemory	Stage1 Firmware Volume (Normal boot path)	OS (after ExitBootServices and OS loader has transferred control to the OS)	No
ACPI Memory	Stage1 Firmware Volume (Normal boot path)	No	Yes
RMU Memory	Stage1 Firmware Volume (Normal boot path)	Stage2 Firmware Volume	No

Table 48. Create/Destroy/Lock Requirements for IMRs (Sheet 2 of 2)

Legacy S3 Memory	Stage1 Firmware Volume (Normal boot path)	No	Yes
AP Startup Vector Memory	Stage1 Firmware Volume (Normal boot path)	OS (after ExitBootServices)	No
Default SMRAM Memory	Stage1 Firmware Volume (Normal boot path)	Stage2 Firmware Volume	No

Similar to the Intel® Quark™ SoC UEFI firmware, the OS loader/OS must also use IMRs to protect sensitive assets it uses. This involves destroying/re-allocation IMRs that were set up by Intel® Quark™ SoC UEFI firmware but that are no longer required (for example, after the OS call to 'ExitBootServices', the PeiMemory/AP Startup Vector Memory is available to the OS so it must remove the IMRs that were created for those regions). In addition, the OS must be aware that any IMRs locked by Intel® Quark™ SoC UEFI firmware are not available to the OS (ACPI Memory and Legacy S3 Memory IMRs).

Thus, IMR design is done at a system level where Reset Vector Code/Intel® Quark™ SoC UEFI Firmware/OS Loader/OS must all agree on IMR implementation and usage. It is not supported to have IMRs implemented by only some of those components. IMRs are either implemented by all components in the system or none at all. For IMR design details, refer to Intel® Quark™ SoC X1000 Secure Boot Programmer's Reference Manual.

21.4 Legacy SPI Flash Protection

For all boot modes except BOOT_ON_FLASH_UPDATE (no matter what build options was used to build the firmware) Legacy SPI Flash Range Protection is enabled (see Section 21.4.1.1 and Section 21.4.2.1) and the configuration registers (see Section 10.5) of the Legacy SPI Flash controller are locked. This happens early in the PI DXE stage before PCI enumeration when SMM SPI initialization has completed. For BOOT_ON_FLASH_UPDATE boot mode at this point, the Legacy SPI Flash Range Protection is enabled, but the configuration registers are not locked. Later, before flash is programmed for boot mode, BOOT_ON_FLASH_UPDATE Legacy SPI Flash Range Protection is disabled.

Depending on hardware SKU or Security Build options used to build the firmware, runtime restrictions of who can update a SPI Legacy Flash area and if a SPI Legacy flash area is writable are applied to legacy SPI Flash.

21.4.1 Base SKU hardware

21.4.1.1 Legacy SPI Flash Range Protection

The following ranges are protected using SPI range protection registers (see Section 10.3) just before the EDKII Boot manager loads and starts the initial Boot option:

- Contiguous area containing RMU Binary (see Section 4.6), MFH (See *Intel® Quark™ SoC X1000 Board Support Package (BSP) Build and Software User Guide*) and platform data (see Section 4.13).
- Contiguous area containing Fixed Recovery Stage1 image and Boot ROM override image.

21.4.1.2 Legacy SPI Flash Update Protection

All SPI Flash regions not protected by SPI range protection registers (see Section 10.3) are writable by run-time code.

21.4.2 Secure SKU hardware or Secure Lock Down build (-DSECURE_LD) used to build firmware

In this condition Intel® Quark™ SoC UEFI firmware (capsule mechanism) is the only mechanism allowed to update/recover the legacy SPI flash. In addition, Intel® Quark™ SoC UEFI firmware is the only module allowed to update the legacy SPI flash NVRAM area where UEFI EFI_VARIABLE_NON_VOLATILE variables are stored. To enforce this, Intel® Quark™ SoC UEFI firmware implements SPI flash protection as follows.

21.4.2.1 Legacy SPI Flash Range Protection

Intel® Quark™ SoC UEFI firmware write protects all SPI Flash except for the NVRAM area (where runtime UEFI EFI_VARIABLE_NON_VOLATILE variables are stored) just before the EDKII Boot manager loads and starts the initial Boot option. This point in time is after the firmware has determined that capsule update is not required. Write protection is achieved using SPI range protection registers (see Section 10.3).

21.4.2.2 Legacy SPI Flash Update Protection

Intel® Quark™ SoC UEFI firmware is the only module allowed to update the legacy SPI flash NVRAM area where UEFI EFI_VARIABLE_NON_VOLATILE variables are stored. However, the legacy SPI flash NVRAM area cannot be protected as in Section 21.4.2.1 because this area may be updated during Intel® Quark™ SoC UEFI firmware boot and also at runtime (UEFI runtime variable support). To enforce the policy of Intel® Quark™ SoC UEFI firmware being the only module allowed to update this area, the legacy SPI flash controller is configured to generate an SMI on any attempt to write to the legacy SPI flash. This protection mechanism is enabled just after the SMI access violation handler has been registered. Refer to Section 10.6 for the legacy SPI controller registers used to implement this legacy SPI flash update protection mechanism.

The SMI handler will not enable flash writes but instead increments an access violation count variable which is stored as an UEFI NVRAM variable. On every boot, if the handler finds the count is not equal to zero, it will trace the value of the count to the console and clear the count variable. No security decisions are taken on the value of the count, but it is useful for debug during bootloader and operating system integration testing.

21.5 PCIe Option ROMs

Depending on Security Build options used to build the firmware, a boot time restriction on loading PCIe Option ROMs is applied.

21.5.1 No Security Build options used to build firmware

All PCIe Option ROM Load requests are allowed.

21.5.2 Secure SKU hardware or Secure Lock Down build (-DSECURE_LD) option used to build firmware

Intel® Quark™ SoC UEFI firmware will not load PCIe Option ROMs from any plug in PCIe cards. Instead, any option ROMs required will be built into the Intel® Quark™ SoC UEFI firmware image. This is typical for embedded systems where the onboard firmware is capable of initializing any hardware it needs.

Note: In this condition PCIe Option ROMs may be loaded if UEFI Secure boot is enabled and provisioned and the Option ROM executable is signed, see UEFI Secure Boot The Option ROM executable must be an UEFI Option ROM and not a Legacy Option ROM.

21.6 Register Locking

Certain Quark SoC registers are responsible for setting up critical system operating features. Once set up, these registers can be locked to prevent malicious changing of their settings to compromise or hang the system. Intel® Quark™ SoC UEFI firmware locks the following critical registers for security (a reset is required to unlock) no matter what build options are used to build the firmware:

- HMBOUND (Op codes 10h/11h: Msg Port 03h: R08h): Determines if a memory access is routed to the MSS or to MMIO. This register is locked after DDR3 initialization is complete when the top of physical memory is known. Refer to Section 4.1.
- HSMMCTL (Op codes 10h/11h: Msg Port 03h: R04h): Defines where in the address space SMRAM is located and allows memory reads/writes to this range to be blocked when not in SMM mode. This register is locked after SMM initialization is complete. Refer to Section 4.4.2.
- Thermal Configuration registers. Refer to Table 14.
- Legacy SPI Controller configuration registers. Refer to Section 10.5.

21.6.1 Secure SKU hardware or Secure Lock Down build (-DSECURE_LD) used to build firmware

In this condition Intel® Quark™ SoC UEFI firmware locks the following additional registers.

- Lock Remote Management DMA (Set to 1b Bit0 of Op codes 10h/11h: Msg Port 04h:R72h)
- IMRxL (Op codes 10h/11h: Msg Port 05h: R1x0h [x=0 to 7]): Intel® Quark™ SoC UEFI firmware locks any IMR that must persist through OS boot and beyond. Refer to Section 21.3

21.7 Redundant Images

It is important that corrupt legacy SPI flash images or legacy SPI flash images that fail to authenticate (secure SKU) should not leave the system un-recoverable. Intel® Quark™ SoC UEFI firmware achieves this by providing redundant Stage1 Firmware Volumes as follows:

- Boot Stage1 Firmware Volume Image1 - This is the first Stage1 Firmware Volume
- Boot Stage1 Firmware Volume Image2 - This is the redundant Stage1 Firmware Volume

- Fixed Recovery Firmware Volume Image - This is the fixed Recovery Firmware Volume whose base and length is defined by the fixed EDKII PCDs PcdFlashFvFixedStage1AreaBase and PcdFlashFvFixedStage1AreaSize

The reset vector code (ROM code for secure SKU) will transfer control to the first 'good' Firmware Volume found from the above list. If both Boot Stage1 Firmware Volumes are 'bad' then the fixed Recovery Firmware Volume is launched. Only if all Firmware Volumes in the above list are 'bad' will the system be un-recoverable. To reduce the risk of ending up with all Firmware Volumes corrupt, it is recommended that all Firmware Volumes above should not be updated in the one update. In reality, it is expected that the Fixed Recovery Firmware Volume will rarely need to be updated. The Fixed Recovery Firmware volume just needs to be 'good enough' to recover the system and updates to it are only expected to address security vulnerabilities.

Failures of Stage2 and subsequent images will result in system boot halting, refer to Firmware Recovery section on how to recovery system flash.

Refer to the Intel® Quark™ SoC X1000 Secure Boot Programmer's Reference Manual for detailed description of this redundant images feature.

Boot Stage1 Firmware Volume Image2 is removed in the Quark BSP Release 1.2 to increase the size for the Stage 1 Firmware Volume Image1.

21.8 Limiting Boot Options

21.8.1 No Security Build options used to build firmware

No boot option limitations are enforced thus allowing the system to boot from all bootable media.

21.8.2 Secure SKU hardware or Secure Lock Down build (-DSECURE_LD) used to build firmware

Intel® Quark™ SoC UEFI firmware only supports booting an image (OS bootloader/ UEFI application) from a known location in legacy SPI flash. This removes the risk of unknown UEFI applications/drivers being loaded from USB/eMMC/SD/UEFI shell and causing unexpected system behavior or even compromising the system. This restriction is removed if UEFI Secure Boot is enabled and provisioned and the boot loader executable is signed, thus allowing booting images from external media (USB/eMMC/ SD), see UEFI Secure Boot

21.9 Denial of Service/Compromise Prevention

21.9.1 SMI Pin Blocking

Quark SoC provides the ability to disable the SMI pin, thus preventing the SMI signal reaching the processor. This could result in a denial of service in some cases (preventing the relocation of the SMBASE for example). In other cases, it could also result in the system being compromised. If, for security reasons, SMI trapping of certain events were set up, then this would prevent the UEFI firmware SMI handler from trapping these events and taking the appropriate action.

Intel® Quark™ SoC UEFI firmware makes sure the SMI pin is not masked by explicitly enabling it at the following stages during boot:

- Start of Stage1 Firmware Volume - Early boot code

- SMM Exit - Just before executing the 'rsm' instruction to exit SMM

21.10 Memory Training Engine Lockdown

As part of DDR3 memory initialization code, the Intel® Quark™ SoC UEFI firmware makes use of a hardware engine to assist in the training of memory. Once DDR3 memory initialization is complete, Intel® Quark™ SoC UEFI firmware locks the hardware training engine to prevent further training sequences being initiated.

21.11 SMM Security Enhancements

21.11.1 SMRAM Caching

SMRAM caching is always disabled by hardware for the secure SKU regardless of the settings for the MTRRs/SMRR. This is to enhance SMM security due to caching issues. Intel® Quark™ SoC UEFI firmware sets up SMRAM as un-cached for the base SKU (non-secure) also to enhance its security.

As periodic SMIs are not used, SMI's in general should be very infrequent. Thus, uncached SMRAM is not expected to have a major system performance impact.

21.11.2 SMBASE Relocation Address Selection

The address selected for SMBASE relocation should not overlap fixed Local APIC range (FEE00000h-FEEFFFFFh).

21.11.3 SMI Handler best practice

Intel® Quark™ SoC UEFI firmware follows the SMI handler best practice as discussed in Section 16.4.

21.12 Rollback Protection on Intel® Quark™ SoC Secure Skus

See rollback protection section of the *Intel® Quark™ SoC X1000 Secure Boot Programmer's Reference Manual* manual for a detailed description of rollback protection on Intel® Quark™ SoC Secure Sku hardware.

The responsibility of UEFI Firmware for rollback protection is to maintain the SVN Array mentioned in the Intel® Quark™ SoC X1000 Secure Boot Programmer's Reference Manual and to ensure no image in Intel® Quark™ SoC Firmware Update Capsule has an SVN that would be rejected by Intel® Quark™ SoC Secure Sku ROM during boot (Section 21.2.1).

During Firmware Update or Firmware Recovery Intel® Quark™ SoC UEFI firmware will do the following:-

- Cache current system flash SVN array into memory.
- If any image in Intel® Quark™ SoC Firmware Update Capsule is targeted at the SVN array in system flash then fail Firmware Update or Firmware Recovery.
- For each signed image in Intel® Quark™ SoC Firmware Update Capsule ensure that the SVN for the image is greater than or equal to the relevant SVN in SVN Array. If image SVN is greater than relevant SVN in SVN Array then update relevant SVN in the cached SVN array.

- Update SVN Array in system flash with cached SVN array if cached SVN array changed in the last step. The SVN array in system flash is updated before all images in Intel® Quark™ SoC Firmware Update Capsule are written to flash with the exception that if Fixed Recovery Firmware Volume Image is in the Intel® Quark™ SoC Firmware Update Capsule and its SVN has been updated in last step then the Fixed Recovery Firmware Volume Image is written to system flash before writing the updated SVN Array to system flash.

  Note: Firmware update / recovery capsule must also be signed and have a particular SVN index in the SVN array assigned to them. This allows rollback protection to also protect unsigned areas of system flash during firmware update / recovery.

21.13 UEFI Firmware Sources

The following table lists the UEFI firmware sources related to the various sections in this chapter.

Section	Title	File Path	Function
21.2.1	Intel® Quark™ SoC ROM Root of trust Secure Boot	QuarkPlatformPkg\Platform\Pei\PlatformInit\PeiFvSecurity.c	PeiInitializeFvSecurity PeiSecurityVerifyFv
		QuarkPlatformPkg\Platform\Dxe\PlatformInit\DxeFvSecurity.c	DxeInitializeFvSecurity DxeSecurityVerifyFv
		QuarkPlatformPkg\Library\QuarkBootRomLib\QuarkBootRomLib.c	SecurityAuthenticateImage SecurityAuthenticateKeyModule
		QuarkPlatformPkg\Platform\Dxe\PlatformInit\DxeCapsuleSecurity.c	PlatformCapsuleSecurity
21.2.2.1	Intel® Quark™ SoC firmware UEFI Secure Boot support during firmware deployment and firmware recovery	QuarkPlatformPkg\Library\PlatformSecureLib\PlatformSecureLib.c	*.*
		QuarkPlatformPkg\Platform\Dxe\PlatformInit\PlatformConfig.c	PlatformConfigOnVariable Write
		QuarkPlatformPkg\Platform\Dxe\PlatformInit\PlatformSecureBoot.c	QuarkAutoProvisionSecure Boot
		QuarkPlatformPkg\Platform\Dxe\PlatformInit\DxeCapsuleSecurity.c	UefiSecureBootCapsulePolicy
21.2.2.2	Intel® Quark™ SoC firmware UEFI Secure Boot support during firmware update.	QuarkPlatformPkg\Platform\Dxe\PlatformInit\DxeCapsuleSecurity	UefiSecureBootNvramCapsulePolicy
		QuarkPlatformPkg\Platform\Dxe\PlatformInit\PlatformSecureBoot.c	QuarkMaintainSecureBootVariables
		QuarkPlatformPkg\Include\PlatformVariableTables.h	SECURE_BOOT_MAINTAIN_VARIABLE_TABLE_DEFINITION
21.2.2.3	Intel® Quark™ SoC firmware UEFI Secure Boot rollback protection using secure SKU ROM.	QuarkPlatformPkg\Include\PlatformVariableTables.h	QUARK_VARIABLE_REQUEST_TO_LOCK_TABLE_DEFINITION
		QuarkPlatformPkg\Platform\Dxe\PlatformInit\DxeCapsuleSecurity.c	PlatformCapsuleSecurity
21.3	Isolated Memory Regions (IMRs)	QuarkPlatformPkg\Platform\Pei\PlatformInit\MrcWrapper.c	SetPlatformImrPolicy
		QuarkPlatformPkg\Platform\Dxe\PlatformInit\PlatformConfig.c	PlatformConfigOnSmmConfigurationProtocol
21.4	Legacy SPI Flash Protection	QuarkNorthCluster\Library\IntelQNCLib\IntelQNCLib.c	QncEnableLegacyFlashAccessViolationSmi
		QuarkPlatformPkg\Platform\DxeSmm\SMIFlashDxe\AccessViolationHandler.c	*.*
21.5	PCIe Option ROMs	QuarkPlatformPkg\Library\PlatformUnProvisionedHandlerLib\PlatformUnProvisionedHandlerLib.c	UnProvisionedHandler
21.6	Register Locking	QuarkPlatformPkg\Platform\Dxe\PlatformInit\PlatformConfig.c	PlatformConfigOnSmmConfigurationProtocol
		QuarkSocPkg\QuarkNorthCluster\Library\IntelQNCLib\IntelQNCLib.c	QNCLockSmramRegion

Section	Title	File Path	Function
21.7	Redundant Images	QuarkPlatformPkg\QuarkPlatformPkg.fdf	*.*
		QuarkPlatformPkg\Tools\QuarkSpiFixup*.py	*.*
21.8.2	Limiting Boot Options	QuarkPlatformPkg\Library\PlatformUnProvisionedHandlerLib\PlatformUnProvisionedHandlerLib.c	UnProvisionedHandler
		QuarkPlatformPkg\Library\PlatformBootManagerLib\BdsPlatform.c	SecureLockBoot
21.9	Denial of Service/ Compromise Prevention	QuarkPlatformPkg\Library\SmmCpuPlatformHookLib\SmmCpuPlatformHookLib.c	PlatformSmmExitProcessing
		QuarkPlatformPkg\Library\QuarkSecLib\Ia32\Flat32.asm QuarkPlatformPkg\Library\QuarkSecLib\Ia32\Flat32.S	stackless_EarlyPlatformInit
21.10	Memory Training Engine Lockdown	QuarkSocPkg\QuarkNorthCluster\MemoryInit\Pei\meminit.c	lock_registers
21.11.2	SMBASE Relocation Address Selection	QuarkPlatformPkg\Platform\Pei\PlatformInit\MrcWrapper.c	GetMemoryMap
21.12	Rollback Protection on Intel® Quark™ SoC Secure Skus	QuarkPlatformPkg\Platform\Dxe\PlatformInit\DxeCapsuleSecurity.c	PlatformCapsuleSecurity

§ §

22.0 Firmware Update

22.1 Introduction

This chapter describes how the Intel® Quark™ SoC UEFI firmware is updated during system runtime.

In brief, the firmware update involves:

- Creating a firmware update capsule. The capsule has multiple images to be placed at specified locations in the SPI flash (refer to Figure 8 and Section 22.2). The full capsule shown in Figure 8 would be contained in a single .cap file.
- Placing the .cap file in memory and calling the UEFI runtime service UpdateCapsule() with the memory location of the capsule. This is done by a runtime agent either running in an UEFI Shell or operating system.
- Programming the capsule images to flash immediately OR after a warm reset, depending on when UpdateCapsule() is called and the arguments that are passed.
- Calling the UEFI runtime service ResetSystem() if a warm reset is required. This service notices that a capsule is in memory and does an immediate S3 reset so that the capsule is preserved in memory after the reset.
- Processing the capsule and programming the capsule images into SPI flash.
- Initiating a cold reset after SPI flash programming is complete to boot with the new SPI flash images.

UpdateCapsule() is described in Section 7.5.3 of the UEFI Specifications (see Table 3) which allows passing information/capsules to the firmware. The format of the capsule passed to UpdateCapsule() is platform-specific.

Example images placed in capsule (Figure 8) would be PEI Stage1 images, DXE Stage2 Image, and EDKII NVRAM Image. A typical EDKII capsule is comprised of contiguous data starting at the Capsule Header Block. The Security Header Block shown in Figure 8 is Quark-specific. For information on the first Security Header Block shown in Figure 8, refer to sections on Asset Signing and Secure Boot Header Data Structures in the Intel® Quark™ SoC X1000 Secure Boot Programmer's Reference Manualwith further information on signing files in the *Intel® Quark™ SoC X1000 Board Support Package (BSP) Build and Software User Guide*.

As noted above a reset may be required to update the firmware. Many of the following sub sections describe how the firmware update completes during the firmware boot flow **after** the reset.

22.1.1 UpdateCapsule() EDKII Module and Platform Module Dependencies

The UpdateCapsule() runtime service is implemented by the core EDKII driver CapsuleRuntimeDxe and depends on a platform implementation of EDKII library classes CapsuleLib to process the capsule it receives.

If reset is required, then the following are also required: core EDKII driver ResetSystemRuntimeDxe, platform implementation of the EDKII library class ResetSystemLib, and core EDKII driver CapsulePei. After the reset to complete the firmware update, platform hooks in PEI stage call CapsulePei and in DXE stage they call CapsuleLib.

Figure 8. Intel® Quark™ SoC Firmware Update Capsule

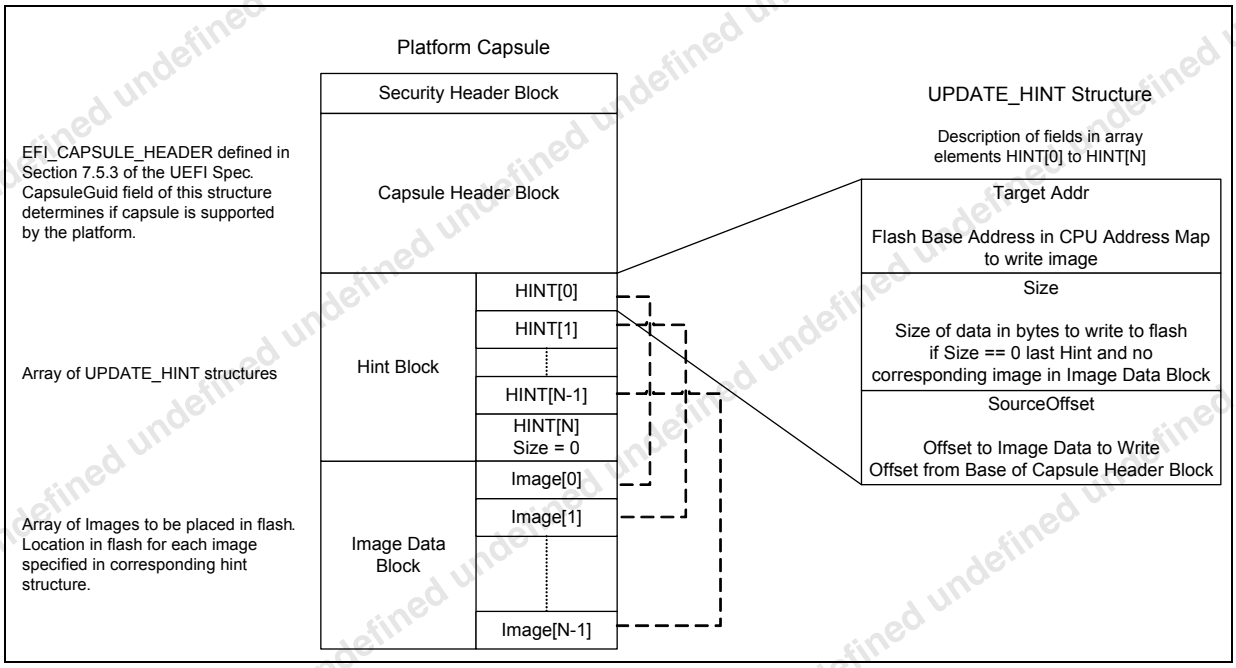

22.1.2 Intel® Quark™ SoC UEFI Firmware Update Steps in Detail:

1. Platform owner creates a capsule for Intel® Quark™ SoC UEFI firmware update (see Section 22.2) in firmware build environment.
2. A UEFI Application or Operating System application running on the target calls the UEFI Runtime service UpdateCapsule() with the capsule (see Section 22.3).
3. UpdateCapsule() will:
   a. Validate UpdateCapsule() parameters with particular emphasis on the flag combinations in the flags field of the EFI_CAPSULE_HEADER structure.
   b. If flag field of EFI_CAPSULE_HEADER indicates no reset is required, then UpdateCapsule() calls CapsuleLib Library Class entry point ProcessCapsuleImage() to execute Section 22.8 below (Write Capsule to Flash) and then returns to the caller of UpdateCapsule().
   c. If flag field of EFI_CAPSULE_HEADER indicates a reset is required, then NVRAM variables are created that correspond to the UpdateCapsule() input parameter ScatterGatherList (see UEFI Specifications Section 7.5.3). UpdateCapsule() may be called multiple times with extra scatter gather lists. The name of the created variable increments each time UpdateCapsule() is called. For example, variables may be named CapsuleUpdateData, CapsuleUpdateData1, CapsuleUpdateData2, etc.

Note: If the firmware update capsule contains new images for any of the areas locked in Section 21.4 (Legacy SPI Flash Protection) or firmware is running on secure SKU hardware then the capsule flags must always indicate a reset is required.

d. If flag field of EFI_CAPSULE_HEADER indicates initiate a reset, then continue from step 4.

4. Initiate Capsule Reset. See Section 22.4.
5. Set boot mode to BOOT_ON_FLASH_UPDATE. See Section 22.5.
6. PEI stage code builds Capsule Update HOBs. See Section 22.6.
7. Delete all variables with name prefix EFI_CAPSULE_VARIABLE_NAME. See Section 22.7.
8. Build all Capsule HOBs created in PEI stage into contiguous capsule images (see Section 22.7) and then write each Capsule image to flash (see Section 22.8).
9. Issue cold reset when all capsules have been written to flash when booting in mode BOOT_ON_FLASH_UPDATE.

   Note: The Intel® Quark™ SoC UEFI firmware always issues a cold reset even if the capsules did not update firmware dependent flash areas, this behavior implies that UEFI capsules built with UEFI Capsule flag CAPSULE_FLAGS_POPULATE_SYSTEM_TABLE are not supported.

10. System cold reboots with flash updated with capsule created in step 1 above.

22.2 Create an Update Capsule

The Intel® Quark™ SoC UEFI firmware platform package contains the tool CapsuleCreate which builds a .cap file containing three sequential binary blocks shown in Figure 8: Capsule Header Block, Hint Block, and Image Data Block.

To place a security header block at the start of the .cap file created by CapsuleCreate, the platform package SignTool can be used for the Intel® Quark™ SoC base SKU (non-secure). For secure SKU, refer to the signing files section of the *Intel® Quark™ SoC X1000 Board Support Package (BSP) Build and Software User Guide*.

The SPI Flash Tools described in *Intel® Quark™ SoC X1000 Board Support Package (BSP) Build and Software User Guide* use the CapsuleCreate application and Intel® Quark™ SoC signing tools to automatically build .cap capsule files.

22.2.1 Intel® Quark™ SoC UEFI Firmware specific capsule flags

EFI_CAPSULE_HEADER structure is defined in Section 7.5.3 of the UEFI Specifications (see Table 3). This structure contains a Flags field.

Intel® Quark™ SoC UEFI firmware specific capsule flags for capsule creation are:-

```
#define PD_UPDATE_MAC   0x00000001
```

Platform data is an area of legacy SPI flash that contains platform configuration data including MRC parameters, platform type, board LAN MAC addresses, etc. (See Section 4.13 and *Intel® Quark™ SoC X1000 Board Support Package (BSP) Build and Software User Guide* for more information, the sample-platform-data.pdat created in the *Intel® Quark™ SoC X1000 Board Support Package (BSP) Build and Software User Guide* can be used as one of the images in the firmware update capsule). If a platform data image is found in the firmware update capsule then the value of this bit determines whether the Intel® Quark™ SoC UEFI firmware updates the MAC addresses in the legacy SPI flash platform data area. If bit == 0b then all fields **except** MAC addresses are updated else if bit == 1b then all fields **including** MAC addresses are updated.

Note: If platform data is in firmware update capsule then the UEFI Specifications standard flag (CAPSULE_FLAGS_PERSIST_ACROSS_RESET 0x00010000) must also be set due to Legacy SPI Flash protection See Section 21.4.

22.3 Call UEFI Runtime Service UpdateCapsule()

The .cap file created in the last section can be passed to the UEFI UpdateCapsule() runtime service by Operating System agents or UEFI applications. See the *Intel® Quark™ SoC X1000 Board Support Package (BSP) Build and Software User Guide*, "Programming flash on the board using serial interface" section. The source for the UEFI application used in UEFI Shell option in the *Intel® Quark™ SoC X1000 Board Support Package (BSP) Build and Software User Guide* can be found in the Intel® Quark™ SoC UEFI firmware platform package.

If the .cap file cannot be placed in a contiguous memory buffer, then refer to information on the ScatterGatherList parameter of the UpdateCapsule() service in Section 7.5.3 of the UEFI Specification (Table 3, Related Documents). In this case, the flags field of EFI_CAPSULE_HEADER passed to UpdateCapsule() must indicate that a reset is required and the last call to UpdateCapsule() must set an additional flag to initiate a reset to complete the firmware update. Alternatively, UEFI runtime service ResetSystem() can be called to initiate the reset.

Note: The capsule may be split into non-contiguous memory pointed to by the ScatterGatherList. There is a specific Quark SoC requirement that the memory containing the EFI_CAPSULE_HEADER and the Quark SoC Security Header Block must be in the same contiguous memory block.

22.4 Initiate Capsule Reset

When UpdateCapsule() has finished, capsule variables (EFI_CAPSULE_VARIABLE_NAME) point to capsule memory locations. The capsule reset involves:

- UEFI runtime service ResetSystem() is called with EfiResetWarm parameter [after UpdateCapsule() or from within UpdateCapsule() depending on a flag].
- ResetSystem () sees capsule variables and calls platform implementation of EnterS3WithImmediateWake (EDKII library class ResetSystemLib).
- System does an S3 reset which guarantees that memory pointed to by the capsule NVRAM variables are preserved in memory.

22.5 Boot in BOOT_ON_FLASH_UPDATE Mode

Setting the boot mode BOOT_ON_FLASH_UPDATE is required to continue the capsule update flow. Pre memory initialization Platform PEI Stage code is responsible for detecting the EDKII boot mode. This code sets the boot mode to BOOT_ON_FLASH_UPDATE if the following conditions are met:

1. System is waking (PM1_BLK + 00h[15]) and the system has resumed from S3 state (PM1_BLK + 04h[12:10]
2. EDKII core PPI service CheckCapsuleUpdate() returns EFI_SUCCESS. CheckCapsuleUpdate() returns EFI_SUCCESS if it find a variable with name EFI_CAPSULE_VARIABLE_NAME in the UEFI variable store.

22.6 Build Capsule Update HOBs

Post memory initialization Platform PEI Stage code is responsible for continuing the Capsule Update flow by calling the Core EDII PPI routines CapsuleCoalesce and CreateState to create the Capsule HOBs which are used by the DXE Stage code to program the system flash.

This code also has the added responsibility to create the platform specific Capsule Security Header HOBs, that is, the Security Header prefix placed in the .cap by the signing tools in Section 22.2.

To achieve this task, the platform PEI Stage post memory initialization code must do the following steps:

1. Skip PEI memory test so that memory locations referenced by EFI_CAPSULE_VARIABLE_NAME variables (Section 22.1.2 Step 3.) are not destroyed.
2. Find the largest memory range excluding that given to PEI area to be used by EDKII CapsuleCoalesce.
3. Create platform specific Capsule Security Header Hobs associated with the capsules referenced by EFI_CAPSULE_VARIABLE_NAME variables.
4. Call EDKII CapsuleCoalesce to coalesce the memory locations referenced by the EFI_CAPSULE_VARIABLE_NAME variables into a contiguous buffer of capsules.
5. Call EDKII CreateState with contiguous buffer returned from CapsuleCoalesce to create the capsule HOBs to be used by the DXE stage to program the system flash.

22.7 Process Capsule Update HOBs

Platform DXE code is responsible for ensuring the Capsule Update flow is completed. It achieves this by doing the following steps:

1. Delete all variables with name prefix EFI_CAPSULE_VARIABLE_NAME.
2. Find all Capsule HOBs created by PEI Stage which need to be written to flash.
3. Write found Capsules (one at a time) to Flash (see Section 22.8).
4. Cold Reset system to complete Capsule Update and execute the updated firmware.

If the boot mode is BOOT_ON_FLASH_UPDATE, all of the above steps are executed. Note that step 1 is also done for all other EDKII boot modes.

22.8 Write Capsule to Flash

Writing a capsule to Flash can be initiated directly by the UEFI runtime service UpdateCapsule (Section 22.1.2 Step 3) or during boot when capsule HOBs are found and mode equals BOOT_ON_FLASH_UPDATE (Section 22.7 Step 3).

EDKII defines a library class CapsuleLib. The implementation of this library is provided by the platform package. The entry point ProcessCapsuleImage of this library is responsible for writing a capsule to flash.

The Intel® Quark™ SoC UEFI firmware implementation of ProcessCapsuleImage will:

1. Verify CapsuleGuid field of the EFI_CAPSULE_HEADER input parameter of ProcessCapsuleImage is supported by the firmware.
2. Do capsule security policy.

a. If Capsule Image passed into ProcessCapsuleImage is prefixed with Quark Security Header then call ROM authentication code (Section 21.2.1) to authenticate Capsule Image. ELSE if a Capsule Security Header HOB is found for the Capsule Image, then build a contiguous buffer containing the Data from the Capsule Security Header HOB followed by the Capsule image passed into ProcessCapsuleImage and call ROM authentication code (Section 21.2.1) to authenticate this new capsule image.

b. Call ROM authentication code (Section 21.2.1) to validate each image within the capsule that has an Quark Security Header and the firmware knows the key for the image (firmware always knows the key for stage 1 and stage 2 firmware volumes).

c. Do firmware Rollback Protection on Intel® Quark™ SoC Secure Skus tasks.

3. Do the following in order if UEFI Secure Boot provisioned / enabled and the capsule is not been written during a recovery boot.

   a. If there is an NVRAM image in the capsule THEN ignore NVRAM in the capsule and delete all UEFI variables in current NVRAM except for UEFI Secure Boot Variables.

   b. If platform data image in the capsule has UEFI Secure boot provisioning items (Table 23) THEN update UEFI Secure Boot Variables in current NVRAM using the UEFI Secure boot provisioning items (Table 23) of platform data capsule image.

4. Save watchdog configuration and disable watchdog to ensure no watchdog reset trigger during flash programming.
5. Write to flash the capsule image that was authenticated by ROM.
6. Restore watchdog configuration.
7. Return to step 3. in Section 22.7

22.9 UEFI Firmware Sources

The following table lists the UEFI firmware sources related to the various sections in this chapter.

Section	Title	File Path	Functions & Types
22.2	Create an Update Capsule	QuarkPlatformPkg\Platform\DxeSmm\SMIFlashDxe\SMIFlashDxe.h	UPDATE_HINT
		QuarkPlatformPkg\Tools\CapsuleCreate\CapsuleCreate.c	main
		QuarkPlatformPkg\Tools\SignTool\DummySignTool.c	main
		MdePkg\Include\Uefi\UefiSpec.h	EFI_CAPSULE_HEADER
		QuarkPlatformPkg\Library\PlatformCapsuleLib\PlatformCapsuleLib.c	SupportCapsuleImage
22.3	Call UEFI Runtime Service UpdateCapsule( )	QuarkPlatformPkg\Applications\CapsuleApp\CapsuleApp.c	UefiMain
		MdeModulePkg\Universal\CapsuleRuntimeDxe\CapsuleService.c	UpdateCapsule
22.4	Initiate Capsule Reset	MdeModulePkg\Universal\ResetSystemRuntimeDxe\ResetSystem.c	ResetSystem
		QuarkSocPkg\QuarkNorthCluster\Library\ResetSystemLib\ResetSystemLib.c	EnterS3WithImmediateWake

Section	Title	File Path	Functions & Types
22.5	Boot in BOOT_ON_FLASH_UPDATE Mode	QuarkPlatformPkg\Platform\Pei\PlatformInit\BootMode.c	UpdateBootMode
		QuarkSocPkg\QuarkNorthCluster\Library\IntelQNCLib\IntelQNCLib.c	QNCCheckS3AndClearState
		MdeModulePkg\Universal\CapsulePei\UefiCapsule.c	CheckCapsuleUpdate
22.6	Build Capsule Update HOBs	QuarkPlatformPkg\Platform\Pei\PlatformInit\MrcWrapper.c	InstallEfiMemory SetPlatformImrPolicy
		QuarkPlatformPkg\Platform\Pei\PlatformInit\Capsule.c	FindCapsuleSecurityHeadersAndBuildHobs
		MdeModulePkg\Universal\CapsulePei\UefiCapsule.c	CapsuleCoalesce CreateState
22.7	Process Capsule Update HOBs	QuarkPlatformPkg\Library\PlatformBootManagerLib\BdsPlatform.c	PlatformBootManagerAfterConsole
		QuarkPlatformPkg\Bds\Library\UefiBootManagerLib\Capsules.c	EfiBootManagerProcessCapsules
22.8 Write Capsule to Flash		QuarkPlatformPkg\Library\PlatformCapsuleLib\PlatformCapsuleLib.c	ProcessCapsuleImage
		QuarkPlatformPkg\Platform\Dxe\PlatformInit\DxeCapsuleSecurity.c	PlatformCapsuleSecurity
		QuarkPlatformPkg\Platform\Dxe\PlatformInit\DxeCapsuleSecurity.c	UefiSecureBootNvramCapsulePolicy
		QuarkPlatformPkg\Library\PlatformCapsuleLib\IA32\TrigSmi.S QuarkPlatformPkg\Library\PlatformCapsuleLib\IA32\TrigSmi.asm	SendCapsuleSmi GetUpdateStatusSmi
		QuarkPlatformPkg\Platform\DxeSmm\SMIFlashDxe\SMIFlashDxe.c	SMIFlashSMIHandler
		QuarkSocPkg\QuarkNorthCluster\Spi\Common\SpiCommon.c	SpiProtocolExecute

§ §

23.0 Firmware Recovery

23.1 Introduction

This chapter describes the recovery process for the Intel® Quark™ SoC UEFI firmware.

Firmware recovery allows the platform firmware to be recovered if the platform will not boot. For example, if power was lost during a normal firmware update, the board would be unbootable.

In brief, firmware recovery is comprised of the following steps:

- building a recovery file (see FVMAIN.fv in *Intel® Quark™ SoC X1000 Board Support Package (BSP) Build and Software User Guide*)
- connecting a USB key with this file to the target
- booting the target in recovery mode
- waiting for the recovery mode firmware to update the target flash using the FVMAIN.fv file

The recovery FVMAIN.fv image shown in Figure 9 is a file that consists of a signed Intel® Quark™ SoC UEFI firmware Recovery Stage2 DXE image followed by a Intel® Quark™ SoC UEFI firmware capsule image (see Section 22.2 Figure 8).

This mechanism ensures that the capsule needed to recover the platform flash, as well as most of the firmware modules required to boot the platform during the recovery process, are sourced from the USB key.

Figure 9. FVMAIN.fv Recovery Module File Contents

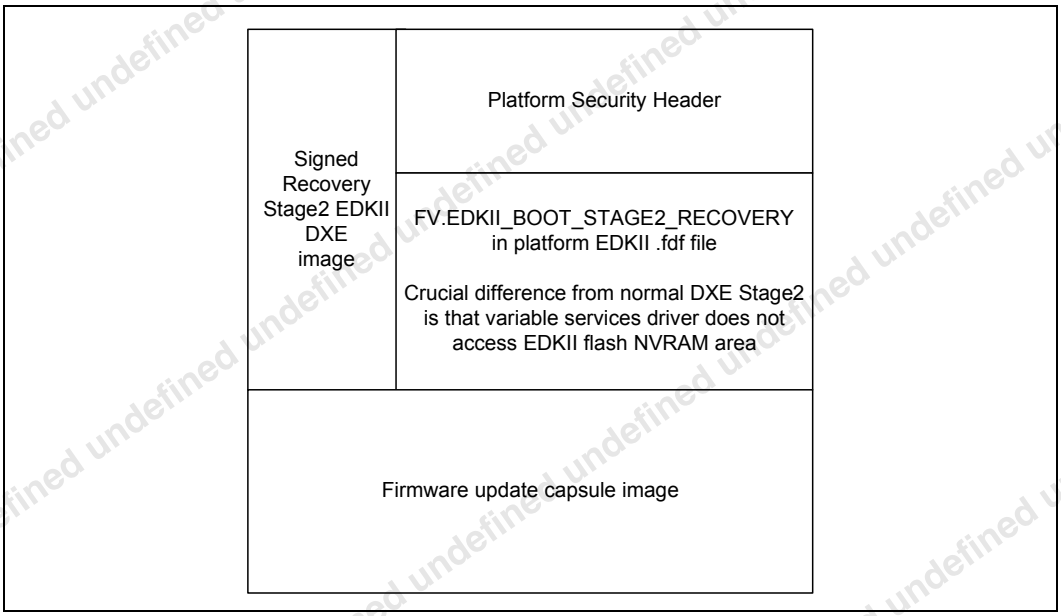

23.1.1 Trigger Intel® Quark™ SoC UEFI Firmware Recovery

Firmware recovery is triggered if any of the following conditions are met:

- Hardware strap has force recovery value when processor comes out of reset. The Intel® Quark™ SoC X1000 hardware strap condition is when the SPI0_MOSI pin is connected to ground when the processor comes out of reset. Firmware detects this by checking that bit (Opcode 06h Msg Port 31H:R00H[0]) is equal to 0b. It is important to emphasise that since this is a strap pin executing recovery firmware cannot read the real time state of this pin.
- Software sets the sticky bit (Opcode 06h Msg Port 31H:R51H[9]) to 1b and then does a Warm Reset.

23.1.2 Required Minimum Intact System Flash Areas

Certain flash areas must be intact for firmware recovery to complete. The flash areas are different for secure SKU and base SKU (non-secure). It is recommended that these flash areas are never part of firmware update and firmware recovery capsules.

23.1.2.1 Intel® Quark™ SoC X1000 Secure SKU

Secure SKU flash areas:

- Fixed Recovery Firmware Volume Image. See Section 21.7 Redundant Images.
- SVN AREA, see the manual for details.
- Signed Key Module, refer to the Intel® Quark™ SoC X1000 Secure Boot Programmer's Reference Manual for details.

23.1.2.2 Intel® Quark™ SoC X1000 Base SKU

Base SKU (non-secure) flash areas:

- Boot ROM Override firmware volume (Reference in EDKII platform .fdf is EDKII_BOOTROM_OVERRIDE.) which performs tasks when processor comes out of reset. The final task is to call entry point in the Fixed Recovery Firmware Volume Image.
- Fixed Recovery Firmware Volume Image. See Section 21.7 Redundant Images.
- The first 2KB of the RMU binary, see Section 4.5.2 for details.

23.1.3 Constraints on UEFI Executables

- Given (Section 23.1.2) it needs to be emphasized that flash data areas should not be trusted during recovery. Example areas are standard EDKII NVRAM area and platform specific MFH (see *Intel® Quark™ SoC X1000 Board Support Package (BSP) Build and Software User Guide*). The exception is platform data area (see Section 4.13 and *Intel® Quark™ SoC X1000 Board Support Package (BSP) Build and Software User Guide*). This area has a CRC and if the CRC check passes and a cross reference check passes between the platform type item and MRC item, then executables may trust platform data.
- If (Section 21.3 Isolated Memory Regions (IMRs)) protection is enabled then the transfer of recovery resources between memory and external media using DMA must ensure that IMR protected areas are not accessed.

23.1.4 Intel® Quark™ SoC UEFI Firmware Recovery Steps

1. Create Recovery file FVMAIN.fv and place in USB Disk, see Section 23.2. Trigger recovery boot (Section 23.1.1) and continue to next step.
2. SoC comes out of reset, detects a force recovery condition is met, and calls Fixed Recovery Firmware Volume Image entry point (see Section 23.3).
3. Initialize platform memory for recovery boot (see Section 23.5).
4. Load UEFI DXE image from external media (see Section 23.6).
5. Complete HOB setup for recovery boot (see Section 23.7).
6. Complete firmware recovery (see Section 23.8).

23.2 Create FVMAIN.fv Recovery Image

See *Intel® Quark™ SoC X1000 Board Support Package (BSP) Build and Software User Guide* for details on how to build FVMAIN.fv.

Note: Even if FVMAIN.fv is being used on an Intel® Quark™ SoC base SKU, it **must** contain a dummy security header for the DXE Stage2 Recovery Image.

23.3 Call Fixed Recovery Firmware Volume

If a force recovery condition is detected (see Section 23.1.1), the Intel® Quark™ SoC firmware UEFI Sec Stage code performs the following to call the Fixed Recovery Firmware Volume:

Note: For a secure SKU, the Sec stage code is called from ROM.
For a base SKU, the Sec stage code is called from reset vector code in EDKII_BOOTROM_OVERRIDE firmware volume (see the platform .fdf file).

1. Copy Fixed Recovery Firmware Volume to eSRAM as soon as processor stack is set up (taking care not to overwrite itself if already running from eSRAM).
2. Find entry point in Fixed Recovery Firmware Volume.
3. Call entry point in Fixed Recovery Firmware Volume.

23.4 Platform Early PEI Stage HOB Setup

Early HOB setup below is done before memory initialization.

23.4.1 Create EFI_PLATFORM_INFO HOB

The EFI_PLATFORM_INFO HOB is created early in the UEFI PEI Stage.

The following EFI_PLATFORM_INFO HOB fields are crucial for boot and are persisted in system flash in the platform data area see Section 4.13 and *Intel® Quark™ SoC X1000 Board Support Package (BSP) Build and Software User Guide*:

- EFI_PLATFORM_INFO.Type: platform type that has been booted
- EFI_PLATFORM_INFO.MemData.MemMrcConfig: configuration values for the memory reference code (see Section 5.6)

  Note: The EFI_PLATFORM_INFO.MemData.MemMrcConfig structure also contains the platform type identifier so that a cross reference sanity check can be done against where EFI_PLATFORM_INFO.Type is persisted in system flash.

The platform data area has a CRC and is write protected before Intel® Quark™ SoC UEFI firmware exits the UEFI PI DXE stage. On a recovery boot if the CRC check or platform type cross reference sanity check fails (see Note above) then the recovery image will do the following to determine the platform type and MRC configuration.

1. Ask the user to select the platform type to be recovered using a list of platform types supported by this Fixed Recovery Firmware Volume.
2. The selected type is used to read the platform data file built into the Fixed Recovery Firmware Volume for this platform type. Each built-in platform data file matches a complete platform data binary file built using *Intel® Quark™ SoC X1000 Board Support Package (BSP) Build and Software User Guide*.
3. Update the HOB fields EFI_PLATFORM_INFO.Type and EFI_PLATFORM_INFO.MemData.MemMrcConfig from the selected platform data file in Fixed Recovery Firmware Volume.

23.4.2 Set Up Early PEI Stage EDKII Boot Mode HOB

The platform Fixed Recovery Firmware Volume sets up the boot mode HOB with the EDKII defined value BOOT_IN_RECOVERY_MODE using the EDKII library function PeiServicesSetBootMode.

23.5 Initialize Platform Memory

If boot mode equals BOOT_IN_RECOVERY_MODE, then memory initialization performs the following recovery-specific steps:

1. Call the memory reference code with a parameter to prompt it to do cold boot initialization.

   Note: This is done in all cases, no matter how the hardware has been reset.

2. Use default memory type information list to build standard EDKII gEfiMemoryTypeInformationGuid HOB, instead of using NVRAM/Flash variable store.
3. Build HOB to point to the largest memory range (excluding that given to PEI area) to be used by recovery components for transferring recovery resources using DMA. Ensure that IMR violations are not triggered, see Section 21.3.

23.6 Load DXE Image

The DXE Stage2 image placed at the start of the FVMAIN.fv file created in Section 23.2 is loaded as the EDKII DXE Firmware volume to be executed.

The following steps are performed:

1. Platform code installs an instance of a defined EDKII PPI gEfiPeiRecoveryModulePpiGuid instead of the firmware volume for the DXE stage2 image persisted in flash.
2. The EDKII Core DXE Load component detects that the boot mode is BOOT_IN_RECOVERY_MODE (set in Section 23.4) and calls the platform recovery module PPI (gEfiPeiRecoveryModulePpiGuid) to install DXE firmware volume to be used for the DXE boot stage.
3. The Platform Recovery module discovers and loads the Recovery File FVMAIN.fv from Installed Recovery Devices (EDKII Standard PPI gEfiPeiDeviceRecoveryModulePpiGuid).
4. Any low level media device drivers used during discovery and loading of FVMAIN.fv use the HOB created in Section 23.5 step 3 to ensure DMA transfers do not trigger IMR violations (Section 21.3).
5. On loading of the recovery FVMAIN.fv file, the DXE firmware volume part is installed using the standard EDKII library function PeiServicesInstallFvInfoPpi.

23.7 Platform Late PEI Stage HOB Setup

23.7.1 Set Up Capsule HOBs

The capsule file part of FVMAIN.fv Recovery file (see Section 23.2) must be placed in HOBs so that the DXE stage code can program the system flash to complete firmware recovery.

After the platform recovery module (Section 23.6) has installed the DXE firmware volume part of FVMAIN.fv, it creates the Capsule HOBs as follows:

1. Check if FVMAIN.fv Recovery file has capsules.
2. Check if capsules are supported by platform.
3. Create platform-specific Security Header HOB (data in first block of capsule, see Figure 8 on page 120).
4. Create standard EDKII Capsule HOB using standard EDKII library routine BuildCvHob (Data from Capsule Header Block, Hint Block, and Image Data Block shown in Figure 8 are put in a contiguous memory buffer).

23.7.2 Set Up Late PEI Stage EDKII Boot Mode HOB

The recovery module (Section 23.6) also changes the boot mode HOB value to BOOT_ON_FLASH_UPDATE so that the DXE stage flash update modules will update flash with the capsule found in Section 23.7.1.

23.7.3 Set Up Late PEI Stage EFI_PLATFORM_INFO HOB

Set EFI_PLATFORM_INFO.BootingRecoveryDxe to TRUE so that platform DXE drivers do not try to access system flash data areas, for example to stop platform DXE drivers accessing MFH (see *Intel® Quark™ SoC X1000 Board Support Package (BSP) Build and Software User Guide*) or maintaining UEFI Secure boot variables when writing recovery capsule to system flash.

23.8 Complete Platform Firmware Recovery

The steps to complete firmware recovery are listed in:

- Section 22.7 Process Capsule Update HOBs
- Section 22.8 Write Capsule to Flash

Note: Section 22.8 Step 1 has no effect since variable service emulator driver is used in DXE Stage2 recovery image. These variables are not relevant for recovery. Also, the variables are cleared after the system boots due to cold reset at the end of Section 22.7.

Note: In Section 22.8 the firmware will not maintain UEFI Secure boot variables since EFI_PLATFORM_INFO.BootingRecoveryDxe was set to true in Section 23.7.3, in other words the NVRAM image in the capsule is always written to flash.

The firmware sources for these sections are shown in Section 22.9.

23.9 UEFI Firmware Sources

The following table lists the UEFI firmware sources related to the various sections in this chapter.

Section	Title	File Path	Functions & Types
23.2	Create FVMAIN.fv Recovery Image	QuarkPlatformPkg\QuarkPlatformPkg.fdf	FV.EDKII_BOOT_STAGE2_RECOVERY
		See Section 22.9 for firmware sources for Section 22.2 Create an Update Capsule	
23.3	Call Fixed Recovery Firmware Volume	QuarkPlatformPkg\Library\QuarkSecLib\Ia32\Flat32.asm QuarkPlatformPkg\Library\QuarkSecLib\Ia32\Flat32.S	ProtectedModeEntryPoint
		QuarkPlatformPkg\Cpu\Sec\ResetVector\Ia32\Flat32.asm QuarkPlatformPkg\Cpu\Sec\ResetVector\Ia32\Flat32.S	ProtectedModeEntryPoint
		QuarkPlatformPkg\Library\PlatformSecServicesLib\PlatformSecServicesLib.c	PlatformIsForceRecoveryConditionsMet PlatformCopyFixedRecoveryImageToSramAndCall

Section	Title	File Path	Functions & Types
23.4	Platform Early PEI Stage HOB Setup	QuarkPlatformPkg\Platform\Pei\PlatformInit\PlatformInfo.c	PdrGetPlatformInfo UserSelectPlatformDataFile
		QuarkPlatformPkg\Include\Guid\PlatformDataFileNameGuids.h	PDAT_FILE_NAME_TABLE_DEFINITION
		QuarkPlatformPkg\Platform\Pei\PlatformInit\BootMode.c	EarlyUpdateBootMode UpdateBootMode
23.5	Initialize Platform Memory	QuarkPlatformPkg\Platform\Pei\PlatformInit\MrcWrapper.c	MemoryInit InstallEfiMemory GetPlatformMemorySize
		QuarkSocPkg\QuarkNorthCluster\Library\RedirectPeiServicesLib\RedirectPeiServices.c	RedirectMemoryServicesSetPool
23.6	Load DXE Image	MdeModulePkg\Core\DxeIplPeim\DxeLoad.c	DxeLoadCore
		QuarkPlatformPkg\Platform\Pei\PlatformInit\Generic\Recovery.c	PlatformRecoveryModule
		QuarkSocPkg\QuarkSouthCluster\Usb\Ohci\Pei\OhcPeim.c	RedirectOhciBulkTransfer RedirectOhciControlTransfer
		QuarkSocPkg\QuarkSouthCluster\Usb\Ohci\Pei\UsbHcMem.c	UsbHcAllocMemBlock
		QuarkSocPkg\QuarkNorthCluster\Library\RedirectPeiServicesLib\RedirectPeiServices.c	RedirectMemoryServicesEnable RedirectMemoryServicesDisable
23.7	Platform Late PEI Stage HOB Setup	QuarkPlatformPkg\Platform\Pei\PlatformInit\Generic\Recovery.c	PlatformRecoveryModule
		QuarkPlatformPkg\Platform\Pei\PlatformInit\Capsule.c	BuildCapsuleSecurityHeaderHob
23.9	Complete Platform Firmware Recovery	See Section 22.9 for firmware sources for Section 22.7 and Section 22.8	

24.0 Firmware Error Handling

24.1 Introduction

This chapter describes the error handling implemented in the Intel® Quark™ SoC UEFI firmware.

The Intel® Quark™ SoC UEFI firmware error handling features are:

- Report and clear errors detected by the Intel® Quark™ SoC Remote Management Unit
- Print to console if EDKII ASSERT macros are called and halt the boot.
- Print to console all EDKII debug messages with error level DEBUG_ERROR

24.2 Report and Clear Errors Detected by RMU

Upon detecting a double bit ECC error or an access violation, the Intel® Quark™ SoC Remote Management Unit writes to one of the four bits [3:0] in the CFGSTICKY_RW register (see Section 4.11) and then issues a Warm Reset.

The Intel® Quark™ SoC firmware detects this early in boot before memory initialization by interrogating the CFGSTICKY_RW register. The firmware reports which error bits are set and then clears the error bits.

24.3 Print EDKII ASSERT Messages to Console and halt system boot.

This is achieved by:

- Ensuring bit 0 is set of core EDKII PCD PcdDebugPropertyMask (Mask constant DEBUG_PROPERTY_DEBUG_ASSERT_ENABLED) for all build options in platform .dsc file.
- Ensuring bit 5 is set of core EDKII PCD PcdDebugPropertyMask (Mask constant DEBUG_PROPERTY_ASSERT_DEADLOOP_ENABLED) for all build options in platform .dsc file.

24.4 Print EDKII DEBUG_ERROR Messages to Console

This is achieved by:

- Ensuring bit 1 is set of core EDKII PCD PcdDebugPropertyMask (Mask constant DEBUG_PROPERTY_DEBUG_PRINT_ENABLED) for all build options in platform .dsc file.
- Ensuring bit 31 is set of core EDKII PCD PcdDebugPrintErrorLevel (Mask constant DEBUG_ERROR) for all build options in platform .dsc file.

Note: For Section 24.3 and Section 24.4, the message printing will only be seen if the necessary EDKII StatusCodeHandler (PEI, DXE or SMM) is installed before the ASSERT or DEBUG message happened.

24.5 UEFI Firmware Sources

The following table lists the UEFI firmware sources related to the various sections in this chapter.

Section	Title	File Path	Function
24.2	Report and Clear Errors Detected by RMU	QuarkPlatformPkg\Platform\Pei\PlatformInit\PlatformEarlyInit.c	CheckForResetDueToErrors
24.3	Print EDKII ASSERT Messages to Console and halt system boot.	QuarkPlatformPkg\QuarkPlatformPkg.dsc	PcdDebugPropertyMask
•	Ensuring bit 5 is set of core EDKII PCD PcdDebugPropertyMask (Mask constant DEBUG_PROPERTY_ASSERT_DEADLOOP_ENABLED) for all build options in platform .dsc file.	QuarkPlatformPkg\QuarkPlatformPkg.dsc	PcdDebugPropertyMask PcdDebugPrintErrorLevel

§ §

25.0 Additional Programming Items

25.1 Cache Line Size Clarification

In accordance with PCI specification v2.3, firmware should program the number of cache lines, for PCI bus masters with memory write and invalidate, to the number of cache lines in the CPU. On Quark SoC-based systems, the cache line size for a bus master should be set to 16 bytes. The cache line size register, offset 0Ch, of a PCI device with bus master memory write and invalidate capability should initially be set to 04h since it accepts cache line size in terms of DWORDs. In the event a device does not support 16 bytes, it is the responsibility of firmware to arbitrate between all devices implementing this register on the same bus to find the lowest common denominator.

25.2 VGA 16-bit Decode

To eliminate the potential for I/O conflicts, it is advised to use 16-bit decoding instead of 10-bit decoding when configuring the VGA decode bits in the PCIe* root ports.

The UEFI firmware should set both VGA enable bit (bit 3) and VGA 16-bit decode bit (bit 4) in the Bridge Control Register (3Eh) to positively decode and forward the VGA accesses.

25.3 I^2C* Host Controller drivers

Intel® Quark™ SoC UEFI firmware provides I^2C* PEI and DXE boot service drivers to enable firmware writers to use the I^2C* Controller built into the Intel® Quark™ SoC. The drivers uses a temporary memory BAR early in boot which is then replaced by the permanent memory BAR when PCI/PnP Enumeration is complete.

25.4 UEFI Firmware Sources

The following table lists the UEFI firmware sources related to the sections in this chapter.

Section	Title	File Path	Function
25.1	Cache Line Size Clarification	Not implemented (Default of 0 used)	Not implemented (Default of 0 used)
25.2	VGA 16-bit Decode	MdeModulePkg\Bus\Pci\PciBusDxe\PciEnumeratorSupport.c	DetermineDeviceAttribute
		MdeModulePkg\Bus\Pci\PciBusDxe\PciIo.c	PciIoAttributes
25.3 I^{2}C* Host Controller drivers		QuarkSocPkg\QuarkSouthCluster\Library\I2cLib*.*	*.*
		QuarkSocPkg\QuarkSouthCluster\Library\Include\I2cLib	*.*
		QuarkSocPkg\QuarkSouthCluster\QuarkSocPkg.dec	PcdI2CFastModeEnabled PcdIohI2cMmioBase

§ §

26.0 Trusted Platform Module (TPM) Support

26.1 Introduction

This chapter describes the Trusted Platform Module (TPM) support. Core EDKII SecurityPkg TPM only supports a memory-mapped I/O interface to TPM devices which is not supported by the Intel® Quark™ SoC Legacy Bridge hardware. Intel® Quark™ SoC UEFI firmware provides an override to the core EDKII SecurityPkg software to allow I^2C* bus access to TPM devices.

26.1.1 TPM Build Requirements

- Before building firmware, the EDKII Builder must follow the one-time prerequisite steps in `CryptoPkg\Library\OpensslLib\Patch-HOWTO.txt`
- Intel® Quark™ SoC UEFI firmware must be built with `TPM_SUPPORT` build option. See *Intel® Quark™ SoC X1000 Board Support Package (BSP) Build and Software User Guide* for details.
- Standard EDKII PCD gEfiSecurityPkgTokenSpaceGuid.PcdTpmInstanceGuid must be set to gEfiTpmDeviceInstanceTpm12Guid at build time or run time.
- Standard EDKII PCD gEfiSecurityPkgTokenSpaceGuid.PcdTpmPhysicalPresence must be FALSE.
- Standard EDKII PCD gEfiSecurityPkgTokenSpaceGuid.PcdTpmPlatformClass must be 0 to specify TCG platform type of PC client.

26.1.2 EDKII SecurityPkg TPM Supported Features

Intel® Quark™ SoC UEFI firmware provides an override of the SecurityPkg Tcg Pei and TcgDxe driver which supports Standard TCG Service Protocol and TPM measured boot (UEFI PI and UEFI BDS stages) as defined in the specification[TCG SPEC BIOS].

26.1.3 EDKII SecurityPkg TPM Unsupported Features

The following features are not supported:

- Memory Map IO access to TPM hardware devices
- SecurityPkg TPM drivers in `\SecurityPkg\Tcg`
- SecurityPkg ACPI TPM Device object not supported.
- Platform Attack Mitigation via Memory OverWrite Request (MOR) not supported.

26.1.4 Additional TPM Features

The UEFI firmware supports the features below in addition to those in EDKII SecurityPkg TPM:

- Intel® Quark™ SoC UEFI firmware allows I^2C* bus access to TPM devices.

- Intel® Quark™ SoC UEFI firmware policy ensures that the TPM device is enabled and activated before UEFI BDS Stage.

26.2 TcgComm Library Override

The Intel® Quark™ SoC UEFI firmware provides an override of the EDKII SecurityPkg SecurityPkg\Library\TpmCommLib. The override version differs from the original SecurityPkg TpmCommLib as described below:

- Provides I^2C* bus access to TPM devices.
- Updates TpmPresent flag of EFI_GLOBAL_NVS_AREA to TRUE or FALSE to match the return value of the TisPcPresenceCheck routine.

Note: Intel® Quark™ SoC UEFI firmware will ASSERT if I^2C* bus accesses to TPM devices fail. The one exception being if the TisPcPresenceCheck routine mentioned above fails to communicate with the TPM device. Higher level SecurityPkg TPM code based on a MMIO interface only expects the TisPcPresenceCheck routine to fail to communicate with TPM devices.

26.3 TcgPei Driver Override

The Intel® Quark™ SoC UEFI firmware provides an override of the EDKII SecurityPkg SecurityPkg\Tcg\TcgPei. The override version differs from the original SecurityPkg TcgPei as described below:

- Update TcgPei function call to use I^2C* bus access instead of mmio TPM devices.

26.4 TcgDxe Driver Override

The Intel® Quark™ SoC UEFI firmware provides an override of the EDKII SecurityPkg SecurityPkg\Tcg\TcgDxe. The override version differs from the original SecurityPkg TcgDxe as described below:

- Ensures that the TPM device is enabled and activated.

26.5 ACPI TPM Device Object

The Intel® Quark™ SoC UEFI firmware adds a TPM device object to the ACPI Differentiated System Description Table (DSDT). The TPM device object is a minimal implementation compared to the original SecurityPkg TPM Device object.

26.6 TPM Measure Boot

The Intel® Quark™ SoC UEFI firmware is enabled with TPM measured boot capability as in the EDKII SecurityPkg to perform event logging into the TPM's PCR (Platform Configuration Registers).

In Pei, TcgPei will log measurement of CRTM version (Core Root of Trust Measurement), main BIOS and FvImage, and in Dxe phase, TcgDxe will log measurement of boot variables, multi-processor information, the SMBIOS table, and so on.

26.7 UEFI Firmware Sources

The following table lists the UEFI firmware sources related to the various sections in this chapter.

Section	Title	File Path	Function
26.2	TcgComm Library Override	QuarkPlatformPkg\Override\SecurityPkg\Library\TpmCommLib	*.*
		QuarkPlatformPkg\Include\Protocol\GlobalNvsArea.h	TpmPresent
26.3	TcgPei Driver Override	QuarkPlatformPkg\Override\SecurityPkg\Tcg\TcgPei	*.*
26.4	TcgDxe Driver Override	QuarkPlatformPkg\Override\SecurityPkg\Tcg\TcgDxe	*.*
26.5	ACPI TPM Device Object	QuarkPlatformPkg\Acpi\AcpiTables\Dsdt\Tpm.asi	*.*
		QuarkPlatformPkg\Include\Protocol\GlobalNvsArea.h	TpmPresent

§ §

undefined undefined undefined undefined undefined undefined undefined undefined